TYPES 1100, 1100-R, 1120, 1120-R
SINGLE & DUAL TRACE OSCILLOSCOPE MAIN FRAMES

Analab B-24

FAIR RADIO Sales
P.O. Box 1105
LIMA, Ohio
45802

INSTRUCTION MANUAL

TYPES 1100, 1100-R, 1120, 1120-R

OSCILLOSCOPE MAIN FRAMES

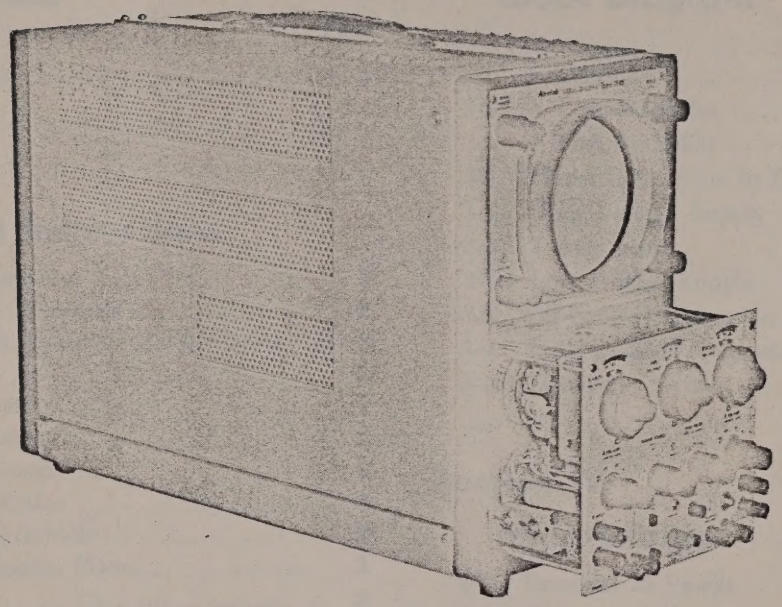

Type 1100 Main Frame with Typical Plug-in Partially Removed

THIS INSTRUCTION MANUAL IS SHIPPED WITH:

TYPE 1100, SERIAL NO. _____

TYPE 1100-R, SERIAL NO. _____

TYPE 1120, SERIAL NO. _____

TYPE 1120-R, SERIAL NO. _____

Analab INSTRUMENT DIVISION

BENRUS WATCH COMPANY, INC.

ANAlytical LABoratory Instruments for Science and Industry

30 CANFIELD ROAD, CEDAR GROVE, ESSEX COUNTY, NEW JERSEY, U. S. A.

AREA CODE 201, CE 9-6500

Cable Address: ANALAB

CONTENTS

Section I

Specifications

	Page
Specifications	1

Section II

Operating Instructions

2-1. General Description	2
2-2. Controls and Terminals	2
2-3. Power Switch, Intensity, Focus Control	2
2-4. Beam Finder	2
2-5. Scale Illumination	2
2-6. Y Position Control	2
2-7. X Position Control	2
2-8. X Display Selector	2
2-9. Rear Input Terminals	2
2-10. X and Y Deflection Plates	3
2-11. Z Input	3
2-12. Sawtooth Output	3
2-13. External Capacitor	3
2-14. Manual Trigger Contacts	3
2-15. Off-Ground Operation	3
2-16. Additional Rear Terminals on Rack-mounted Type 1100	3
2-17. Bandwidth Switch	3
2-18. CRT Alignment Lever	3
2-19. Astigmatism Adjustment	3
2-20. X and Y Amplifier Gain	3
2-21. Dual-Trace Presentations	4
2-22. Y Display Function Selector	4
2-23. X Display Function Selector	4
2-24. A and B Separation Control	4
2-25. Use of Chopped or Alternate Switching Modes	4
2-26. Synchronizing Two Harmonically Related Signals	4
2-27. Synchronization of Non-Harmonically Related Signals	5
2-28. Z Input and Chopper Blanking	5
2-29. Separation Balance	5
2-30. Plug-ins with Null Readout	5
2-31. Use of Null Readout to Measure Phase	5
2-32. Use of Trigger Amplifier to Increase Gain	5

Section III

Block Diagram

	Page
3-1. General	6
3-2. Y Post Amplifier	6
3-3. X Post Amplifier	6
3-4. Direct Connection to Deflection Plates	6
3-5. High Voltage Supply	6
3-6. Z Axis Input	6
3-7. Low Voltage Supply	6
3-8. Off-Ground Operation	6
3-9. 115V or 230V Operation	6
3-10. Electronic Switch	6

Section IV

Maintenance

4-1. Removal of Panels	8
4-2. Reversal of Tilt Foot	8
4-3. High Voltage Supply	8
4-4. Low Voltage Supply	8
4-5. Cathode-ray Tube Replacement	8
4-6. Illuminated Scale Bulbs	8
4-7. Tube Replacements	8
4-8. Standard Parts	8
4-9. Special Parts	8
4-10. Rack Installations	8
4-11. Installation of Type 9002 Slides	9
4-12. Servicing the Rack Oscilloscope	10
4-13. Test Procedure	10
4-14. Terminal Board Layout	12
4-15. Replacement Parts	14
4-16. Schematics	17-27

Section V

Warranty and Repairs

5-1. Claim for Damage in Shipment	29
5-2. Warranty	29
5-3. Returning Instruments for Repair	29
5-4. Shipping	29

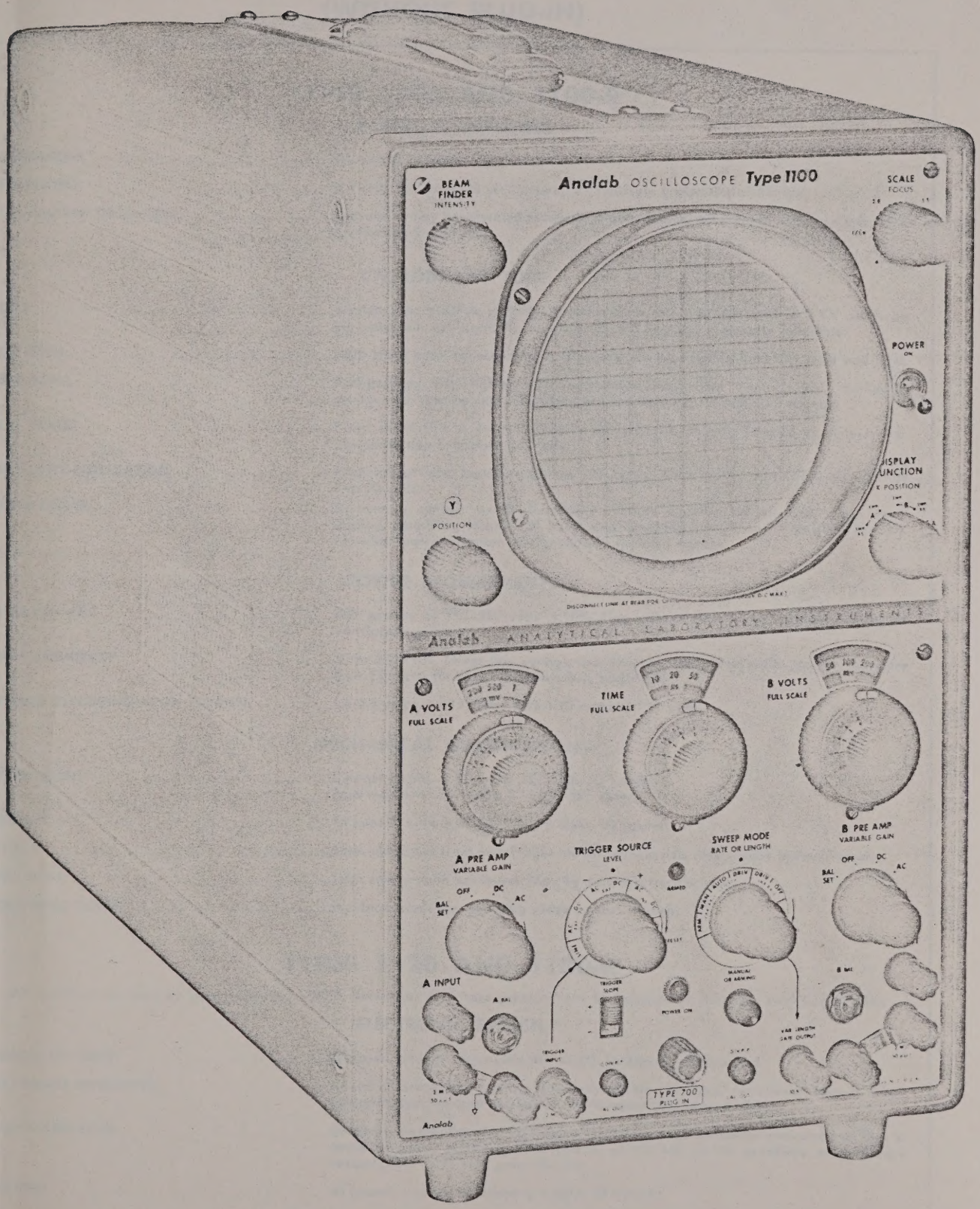

TYPE 1100 OSCILLOSCOPE MAIN FRAME WITH
TYPE 700 DUAL CHANNEL HIGH-GAIN PLUG-IN IN PLACE

SECTION I — SPECIFICATIONS

(WITHOUT PLUG-IN)

TYPES 1100 AND 1100-R

X AND Y AMPLIFIERS

BANDWIDTH	DC to 500 kc (3db)
SENSITIVITY	0.4 volts full scale (10 centimeters). 3x full-scale undistorted deflection.
OFF-GROUND OPERATION	Instrument may be operated safely up to 500 volts DC off ground, with case grounded, by opening link at rear.

CATHODE-RAY TUBE

TYPE	Analab Type 5AQP-B, metallized mono-accelerator tube operated at 3 KV accelerating potential. P31 normally supplied; P2, P7 and P11 optionally available.
CRT BEZEL	Light-proof bezel for mounting oscilloscope cameras and to hold CRT scale and filter.
CRT SCALE	Anti-parallax, edge-lighted with controllable illumination. 10cm x 10cm, marked in cm squares. Appropriate filter provided for P31, P2, P7 and P11 screens.
CRT PLATES	Direct connection to deflection plates via terminals at rear; selected by slide switch. Sensitivity approximately 24v/cm.
INTENSITY MODULATION	Terminals at rear. Input impedance 10K ohms. Beam blanks on positive signal from 5 to 50 volts.
BEAM FINDER	Momentary contact switch electrically reduces amplifier output and scales down display, permitting location of beam and centering with X and Y position controls. Provides "notch" location of signals on expanded sweeps.

POWER REQUIREMENTS

LINE VOLTAGE	Will operate at 115/230 volts ±10%. Line voltage selected by changing wiring of transformer primary.
LINE FREQUENCY	50 to 2500 cps. Lower line voltage operation increases above 400 cps, but no more than 115 volts for sinusoidal powerline waveform.
POWER DEPENDING UPON PLUG-IN	1.5-2.5 amps at 115 volts. 0.75-1.25 amps at 230 volts.

MECHANICAL SPECIFICATIONS

DIMENSIONS	Cabinet mount — 9" wide, 15" high, 22" deep. Rack mount — 19" wide, 7" high, 22" deep.
WEIGHT	35 pounds unpacked. Shipping Weight: 40 pounds.
FINISH	Satin aluminum front panel, light brown wrinkle side covers, dark brown frames.
TILT FOOT	Folds away when not in use. May be mounted front or rear.
OPTIONAL SLIDES	Provision made for mounting slides on rack models.

TYPES 1120 AND 1120-R

All specifications same as Types 1100 and 1100-R, except for dual-trace presentations by inclusion of electronic switching circuitry.

ELECTRONIC SWITCH

REPETITION RATE	Chopped mode at approximately 40 KC. Switching tails blanked.
ALTERNATE SWITCHING	At end of sweep during return trace interval. No switching "serrations." Permits simultaneously synchronized display of non-harmonically related signals.
SWITCHING LEVEL	Switching accomplished at high signal level between preamplifier and post-amplifier to avoid on-screen switching noise and to permit 100 µv/cm sensitivity of dual-trace presentations with high gain plug-ins.
WEIGHT	40 pounds unpacked. Shipping weight: 45 pounds.

SECTION II
OPERATING INSTRUCTIONS

TYPES 1100 AND 1100-R

2-1. GENERAL DESCRIPTION

The Type 1100 is a basic main frame that can be operated as a simple cathode-ray tube indicator or with a variety of plug-ins. The simplest form of operation is achieved by using the Type 100 X-Y Plotter which permits energizing the main frame and provides access to the X and Y post amplifiers. Under these conditions the Type 1100, or its rack mounted version, is a stable X-Y plotter with a deflection sensitivity on each axis of 0.04 volts/cm. Well regulated power supplies for operation of the cathode-ray tube are incorporated in the Type 1100, as well as vertical and horizontal positioning circuits.

2-2. CONTROLS AND TERMINALS

Operating controls for the Type 1100 are on the front panel, while various input terminals are available at the rear. Internal slide switches permit convenient switching to the deflection plates of the cathode-ray tube and reduction of the bandwidth of the amplifiers. The functions of each control are outlined below as they would function with a typical plug-in.

2-3. POWER SWITCH, INTENSITY, FOCUS CONTROLS

Turn the oscilloscope on and allow 20 seconds for a delay relay to apply B+ voltage to the tubes. Adjust the Intensity and Focus controls for a sharp spot. (Caution: Keep the spot intensity at a low level when it is stationary so as not to burn the screen.)

2-4. BEAM FINDER

If no spot appears on screen even at full intensity, rotate the Beam Finder control (a spring loaded switch) to automatically locate the spot or trace. While holding the Beam Finder on, center the spot or trace with the X and Y Position Controls and then release the Beam Finder. The spot or trace will then be approximately on center. This control will be extremely useful for locating the spot or trace under any conditions of operation. If no spot appears on screen with the Beam Finder operating, only two conditions can cause this. Either the Intensity control has to be advanced more, or a signal with an extremely high DC component drives the amplifiers beyond the range of the Beam Finder or the preamplifier is grossly out of balance.

The Beam Finder is also very useful in expanded sweep applications. With the sweep expanded, turn on the Beam Finder. With the horizontal positioning control move the desired portion of the trace to the center of the screen. When the Beam Finder is released, the "tagged" part of the display will automatically be centered and expanded.

2-5. SCALE ILLUMINATION

This control is calibrated in f stops. For Polaroid Type 47 film, set the scale illumination at f/5.6 and the camera shutter to the same aperture. The shutter exposure should be ½ sec. for good contrast of the scale. This calibration is for red illumination of the scale.

For visual work the scale control may be varied for optimum scale illumination under different ambient light conditions. If white illumination of the scale is preferred, remove the bezel with the scale and rotate it 180°. (This changes the f/ stop calibration.)

If a filter is used to increase trace contrast, insert it between the face of the cathode-ray tube and illuminated scale. If necessary, open the clamp on the CRT base and move the tube back to allow for the added thickness of filter.

2-6. Y POSITION CONTROL

Moves the trace vertically. The black and red knobs are fastened to the same shaft in the Types 1100 and 1100-R. In the dual-trace Types 1120 and 1120-R, the black knob controls the Y Display Function switch. Operates for either A or B channels on dual channel plug-ins.

2-7. X POSITION CONTROL

Moves the trace horizontally, when either the sweep time base or X amplifier is used.

2-8. X DISPLAY SELECTOR

This control selects the combination of signals to be applied to the X and Y axis when dual channel plug-ins are used. Either channel may be displayed against a sweep by proper positioning of the control. Moreover, the signal on either channel may be display against a calibrated 10 cm sweep or an expanded calibrated 50 cm sweep. Finally, signals may be plotted against each other, either for the Type 1100 alone, or when a plug-in is used, with the Display Selector in the A vs B position.

2-9. REAR INPUT TERMINALS

Direct access to the X and Y deflection plates; the Z input; connection for an external capacitor; and the

manual trigger switch contacts are available at terminals on the rear panel. When the rear input terminals are not used, they should be shorted out to prevent stray pickup. Similarly the front input terminals should be shorted out for rear-input operation.

2-10. X AND Y DEFLECTION PLATES

Direct access to the X or Y deflection plates is made through clearly marked terminals at the rear. A circuit ground terminal is also provided. Direction of deflection for single ended input is shown. To complete the signal path from these terminals to the deflection plates, throw the slide switches at the top of the post-amplifier terminal board inside the cabinet.

2-11. Z INPUT

Open the connection between the Z input and ground. Intensity modulation of the trace is then possible by connecting a signal to these terminals. The level of signal required to fully blank the trace depends upon the intensity level and varies from about 5 to 50 volts. Reconnect the Z input terminal to circuit ground when intensity modulation is not used.

2-12. SAWTOOTH OUTPUT

The sweep sawtooth voltage is available at a rear terminal. Its peak to peak amplitude is approximately 1 volt.

2-13. EXTERNAL CAPACITOR

For certain plug-ins, provision is made for slower sweeps by connecting an external capacitor at the rear terminals of the Type 1100. A good quality polystyrene capacitor is recommended for best linearity of sweep. For each microfarad of added capacitance, the sweep duration will be slowed by about 50 seconds.

2-14. MANUAL TRIGGER CONTACTS

Some plug-ins have a manual trigger switch for controlling the start of external equipment. The contacts of this switch are brought to the rear terminals of the Type 1100 where they are conveniently available to be hooked into an external synchronizing circuit. These contacts are electrically isolated from all other circuits and ground.

2-15. OFF-GROUND OPERATION

The circuitry of the Type 1100 can be safely floated up to 500 volts DC off-ground by opening the link at the rear. It is recommended that the case be tied to earth ground at the metal binding post at the rear. Off-ground signals riding on DC potentials may then be connected to the X, Y or Z axis.

2-16. ADDITIONAL REAR TERMINALS ON RACK-MOUNTED TYPE 1100

Additional terminals are provided at the rear of the rack-mounted Type 1100 for X and Y input and external synchronization. When connections are made at the rear, throw the slide selector switches in the plug-in for this mode of operation.

2-17. BANDWIDTH SWITCH

When high gain plug-ins are used at maximum sensitivity, it may be desirable to reduce the bandwidth of the amplifiers to reduce high frequency noise. Bandwidth switches for the X and Y axes are mounted internally and are easily accessible by removing the side covers. In the narrow-band position of the switches, the bandwidth is approximately 10KC. Narrower bandwidths may be obtained by increasing the size of capacitors, C305 and C405, mounted on the bandwidth switches.

2-18. CRT ALIGNMENT LEVER

This lever facilitates alignment of the trace of the CRT with the scale.

2-19. ASTIGMATISM ADJUSTMENT

The astigmatism adjustment for the CRT is available internally when the side-covers are removed. With the Analab Type 5AQP-B mono-accelerator tube, this adjustment need be set only when the CRT is replaced. The astigmatism adjustment should be made in conjunction with the front panel focus control for best uniform focus over the full screen area. *Adjustment of the astigmatism control will change the deflection factors of the CRT and requires that the Post Amplifiers be recalibrated.*

2-20. X AND Y AMPLIFIER GAIN

Internal adjustments are available for setting the gain of the X and Y post amplifiers. The sensitivity is usually set to 0.4 volts full scale (10 cm) for calibrated use with plug-ins.

TYPES 1120 AND 1120-R

All of the foregoing operating instructions and controls for the Types 1100 and 1100-R, except for the X Display Selector, apply to the Types 1120 and 1120-R dual-trace oscilloscopes. The additional operating instructions and controls for the Types 1120 and 1120-R are explained on the following page.

DUAL-TRACE TYPES 1120 AND 1120-R

2-21. DUAL-TRACE PRESENTATIONS

By means of an electronic switch incorporated in the Types 1120 and 1120-R oscilloscope main frames, *all* mating Analab dual-channel plug-ins permit dual-trace displays. Any two harmonically related signals may be stably synchronized and plotted against time; against another variable fed to the X axis, giving dual-trace X-Y plots; or against each other for single trace X-Y plots. Moreover, two non-harmonically related signals may be stably displayed on a common time base, using the alternate switching mode. With many types of displays possible with these dual-trace oscilloscopes, the user will find the Beam Finder extremely helpful in locating the traces or adjusting the controls. If the trace is lost at any time, switch to Auto sweep and then use the Beam Finder for location of the display.

2-22. Y DISPLAY FUNCTION SELECTOR

The Y function switch has five positions to select (1) the A channel, (2) the B channel, (3) the A and B channels, simultaneously displayed by means of an electronic chopper, free running at approximately 40 KC, (4) the A and B channels, alternately displayed by switching at the end of each sweep, and (5) A versus B plots.

2-23. X DISPLAY FUNCTION SELECTOR

This is a 3-position switch that selects the signal displayed on the X axis: (1) any external signal fed to the input terminal located to the lower left of the control, (2) the calibrated 10 cm sweep, and (3) an expanded calibrated 50 cm sweep. The X axis sensitivity for external signals is a calibrated 40 mv/cm.

2-24. A AND B SEPARATION CONTROL

This control adjusts the relative spacing of the two channels, while the Y Position Control moves the entire display. The two channels may be overlapped or separated, with either one above or below the other. The separation control is marked so as to indicate the direction of rotation for displaying either the A or B channel as the upper trace.

2-25. USE OF CHOPPED OR ALTERNATE SWITCHING MODES

The chopped mode of operation is best for displaying two repetitive Y signals against a sweep whose rate is 2.0 ms/cm or slower. Above this sweep rate, the switching serrations may become objectionable and alternate trace switching is preferred. The chopped mode also permits the displaying of single transients on time bases of 100 μs/cm or slower. Either the chopped or alternate switching mode may be used for dual-trace X-Y plots with the Auto Sweep and internal triggering modes selected to gate on the signals.

2-26. SYNCHRONIZING TWO HARMONICALLY RELATED SIGNALS

The simplest and most foolproof method for synchronizing the dual-trace display when the two signals are harmonically related is to operate the trigger and sweep circuits with *external* trigger sources. With external triggering, the dual-trace display will synchronize as simply as a single channel scope. The triggering and sweep mode procedures described in any Analab manual for the plug-in apply. If external triggering is used, changes in separation of the two traces will not affect synchronization, either in the chopped or alternate switching modes. Auto sweep is recommended for simplest operation, unless the driven sweep mode is required to permit leveling to a particular point on the external trigger signal or for very low frequency trigger signals.

Since a minimum signal level of approximately 200 millivolts is required for external triggering, a trigger amplifier is added to the Types 1120 and 1120-R dual-trace main frames to simplify the stable triggering of harmonically related signals, using the external triggering mode, for levels as low as 100 microvolts/cm. The trigger amplifier has a bandwidth at the 3db points of about 8 cps to 400 KC.

Except for a particular condition which will be discussed later, *for synchronization of harmonically related signals of any signal level within the capabilities of a particular plug-in,* connect the A channel Trigger Source signal from the output jack in the main frame to the External Input terminal in the plug-in. The trigger source signal is the amplified output of the A channel preamplifier and is of sufficient amplitude to synchronize the sweep externally for any on-screen A signal of 0.5 cm peak-to-peak or greater. If for any reason it is desirable to use the other signal of the dual trace display as the triggering source, then it should be connected to the A channel, from which the amplified trigger is derived.

If the foregoing procedure is used, the only conditions under which it will be necessary to use internal triggering of the dual-trace display is the synchronization of two non-harmonically related signals (see Section 2-27) or signals whose repetition rate is below the low frequency response of the AC coupled trigger amplifier.

For very slow transients or low repetition rate signals below about 5 cps, if either the A or B signals is above 200 millivolts, the level at which external triggering is possible, patch either signal directly to the External trigger input. Using external DC triggering and the chopped mode, stable patterns will easily be obtained. If the A and B signals are below 200 millivolts, switch to Internal DC triggering, Driven Sweep and the chopped mode and carefully level select for synchronization.

It should be emphasized that external triggering of the sweep, whenever possible, avoids any difficulties encountered with internal triggering and separation of the

traces. External triggering is mandatory for precise and fool-proof phase measurements, since both traces are then triggered and referenced by a common waveform.

2-27. SYNCHRONIZATION OF NON-HARMONICALLY RELATED SIGNALS

The excellent stability and lock-out of Analab trigger and sweep circuits makes it possible to display and synchronize independent, non-harmonically related signals on a common time base, using the alternate switching mode. Internal triggering is required.

With internal sync, stable patterns will be obtained, using auto or driven sweeps and DC coupled triggering, *if the two traces are overlapped or only partially separated.* Use the Trigger Level control for stable synchronization. The level control will probably have to be reset if the trace separation or Y position is changed. If complete separation of the traces is desired, the criticalness of synchronization will depend upon the signal waveform. The following routine is suggested to achieve stable traces as they are separated:

1. If one or both of the traces is unstable, using Auto sweeps and AC coupled triggers, vary the amount of separation slightly at the point of desired separation to change the duty cycle of the sweep and facilitate synchronization. If the traces do not lock,
2. Switch the trigger polarity. If unsuccessful,
3. With plug-ins that have variable length sweeps, vary the length of the time base slightly. This changes the sweep repetition rate without affecting the rate calibration.

2-28. Z INPUT AND CHOPPER BLANKING

In the chopped mode, the switching tails are blanked out by a signal fed to the cathode of the cathode-ray tube. If an external signal is to be fed to the Z axis (which uses the same cathode electrode of the CRT), connect the signal to the input terminals at the rear (see Section 2-11) and throw the internal slide-switch on the electronic-switch module to Z input. Return the slide switch to the chopper blanking position when external Z input is not required.

2-29. SEPARATION BALANCE

The ability to separate the traces the same amount in either direction, with respect to two overlapped traces, depends primarily on the DC balance of the preamplifiers, the position in which the A and B null readout dials are left when null readout plug-ins are used, the degree of balance of the output stages of the preamplifiers, and the balance of the amplifiers in the electronic switch. The preamplifiers should be balanced after about a 15 minute warm-up and periodically thereafter over long runs. The readout dials can be used as secondary separation controls. The separation control itself will generally have sufficient range to compensate for any remaining unbalance in the system, and only in rare cases of tolerance build-up, as tubes age, will a tube change be necessary to achieve overlap of the traces or complete separation.

2-30. PLUG-INS WITH NULL READOUT

When the dual-trace main frames are used with plug-ins that have Null Readout, the readout dials for the A and B channels function independently of each other. To minimize confusion of overlapping traces, the user may wish to separate the traces as much as possible while the null readout measurements of amplitude are being made.

2-31. USE OF NULL READOUT TO MEASURE PHASE

One of the important applications of dual-trace scopes is to measure relative phase between two signals. Plug-ins with Null Readout of sweep time can make such measurements very precisely and accurately. The method is as follows:

1. First turn both A and B preamplifiers to OFF.
2. With the separation control, overlap the two horizontal traces and position them to the horizontal Null axis. This establishes the zero reference for both waveforms, whose phase is being measured.
3. Turn on the A preamplifier and using the Driven Variable Rate mode, level select so that the waveform starts exactly at the horizontal zero axis.
4. Using Sweep Variable Rate control and the X Positioning control, set one cycle of the waveform to exactly 10 cm. One cycle, or 360°, now equals 10 cm. Full scale on the dial also equals 10 cm. Thus on the 0 to 1 scale, which has 100 divisions, each minor division now equals 3.6°.
5. Turn on Channel B.
6. Set the Null Readout dial to zero and line up one of the traces with the vertical null axis. Null balance the second trace to the same axis. Read the number of minor divisions on the readout dial and multiply by 3.6 for the answer in degrees.
7. Greater resolution in making this measurement can be had by using the calibrated 5x sweep expansion. Each minor division then equals $3.6 \div 5 = 0.72$ degrees. By interpolating between minor divisions, at least ½ degree resolution is possible for making phase measurements.

2-32. USE OF TRIGGER AMPLIFIER TO INCREASE GAIN

Since the trigger amplifier amplifies the output of the A channel preamplifier, it can be used to increase the sensitivity of the scope as a single-trace device. For example, with a Type 700 Plug-in the 100 μv/cm sensitivity can be increased to 10 μv/cm sensitivity with good signal-to-noise ratio. To work at this sensitivity, first throw the bandwidth switches to narrow the response to 10 KC and minimize high-frequency noise. Patch the Trigger Source Output to the B channel input. Set the B range control for the desired amplitude of low level signals. The bandpass of this high-gain system is about 5 cps to 10 KC.

SECTION III — BLOCK DIAGRAMS

TYPES 1100 AND 1100-R

3-1. GENERAL

The Types 1100 and 1100-R main frames consist of three major assemblies, (1) X and Y Post Amplifiers, (2) High Voltage Supply, (3) Low Voltage Supply.

3-2. Y POST AMPLIFIER

The output signal from either the A or B pre-amplifier in the plug-in may be switched into the Y post amplifier by means of the X Display Function Switch. These balanced signals are fed to the first stage of the post amplifier, a cascode input circuit, and then to a balanced output stage connected to the Y deflection plates. The Y positioning is in the post amplifier.

3-3. X POST AMPLIFIER

The output of the B pre-amplifier or the sweep sawtooth voltage is fed through the X Display Function Switch to the X post amplifier, identical to the Y post amplifier. X positioning is located in the X post amplifier.

3-4. DIRECT CONNECTION TO DEFLECTION PLATES

When signals are connected directly to the deflection plates, the signals coming through the pre- and post-amplifiers are disconnected by slide switches. However, X and Y positioning is maintained through two megohm coupling resistors between the post amplifiers and the deflection plates.

3-5. HIGH VOLTAGE SUPPLY

Approximately 3000 volts total accelerating potential is applied to the gun of the CRT. A regulated RF supply generates —2700 volts for the cathode of the CRT and +300V is applied to the accelerator electrode by the variable astigmatism control.

3-6. Z-AXIS INPUT

The trace can be intensity modulated by feeding signals to the cathode of the CRT.

3-7. LOW-VOLTAGE SUPPLY

Five regulated potentials are obtained from the low voltage supply, 400V, 250V, 100V, — 165V and 18V. The 18 volt supply provides regulated DC power to some of the heaters of the pre-amplifier and post-amplifier stages. The regulated 1000 cycle squarewave calibrating signal is developed in the low-voltage supply.

3-8. OFF-GROUND OPERATION

A floating ground for all circuits of the Type 1100 is tied to case ground through a link at the rear of the low-voltage supply. Opening this link permits off-ground operation of the type 1100 up to 500 volts DC.

3-9. 115V OR 230V OPERATION

115 volt or 230 volt power line operation is obtained by changing the connections of the primary of the power transformer.

TYPES 1120 AND 1120-R

3-10. ELECTRONIC SWITCH

The output signals of the A and B preamplifiers are fed via the Y Display Function switch to an electronic switch which couples either or both signals to the Y Post amplifier. Signals from channels A and B are fed to V900 and V901, respectively, which are amplifiers of approximately unity gain. These amplifiers are turned on and off at about a 40 KC repetition rate in the chopped mode and at the end of each sweep in the alternate mode by switching multivibrator V902. Transistors Q901 and Q902 couple and maintain the good waveshape of the squarewave switching signal that is fed to the on-off amplifier tubes. To prevent spurious switching transients from appearing on screen, the multivibrator signal is also coupled to a blanking amplifier which feeds blanking pulses to the cathode of the CRT during the switching interval.

The electronic switch circuitry is inserted between the Display Function switch and Y Post amplifier (see block diagram next page) to convert the Type 1100 main frame to dual-trace Type 1120 operation. The external X input of the Type 1120 is coupled directly to the X Post amplifier, which has a sensitivity of 40 mv/cm and a bandwidth of DC-500 KC. The Trigger Amplifier takes the output of the Channel A preamplifier, amplifies the signal and makes it available at an output jack for use as an external sync source.

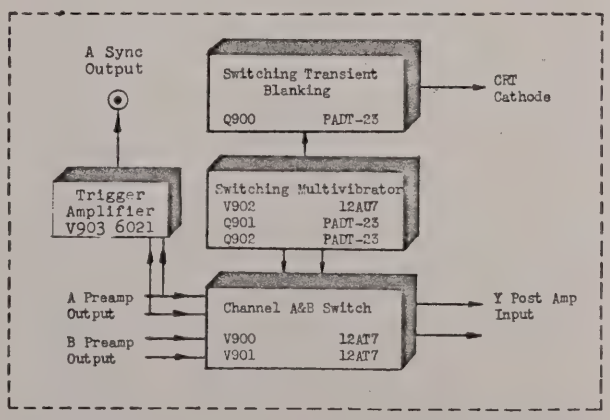

BLOCK DIAGRAM — ELECTRONIC SWITCH FOR TYPES 1120, 1120-R

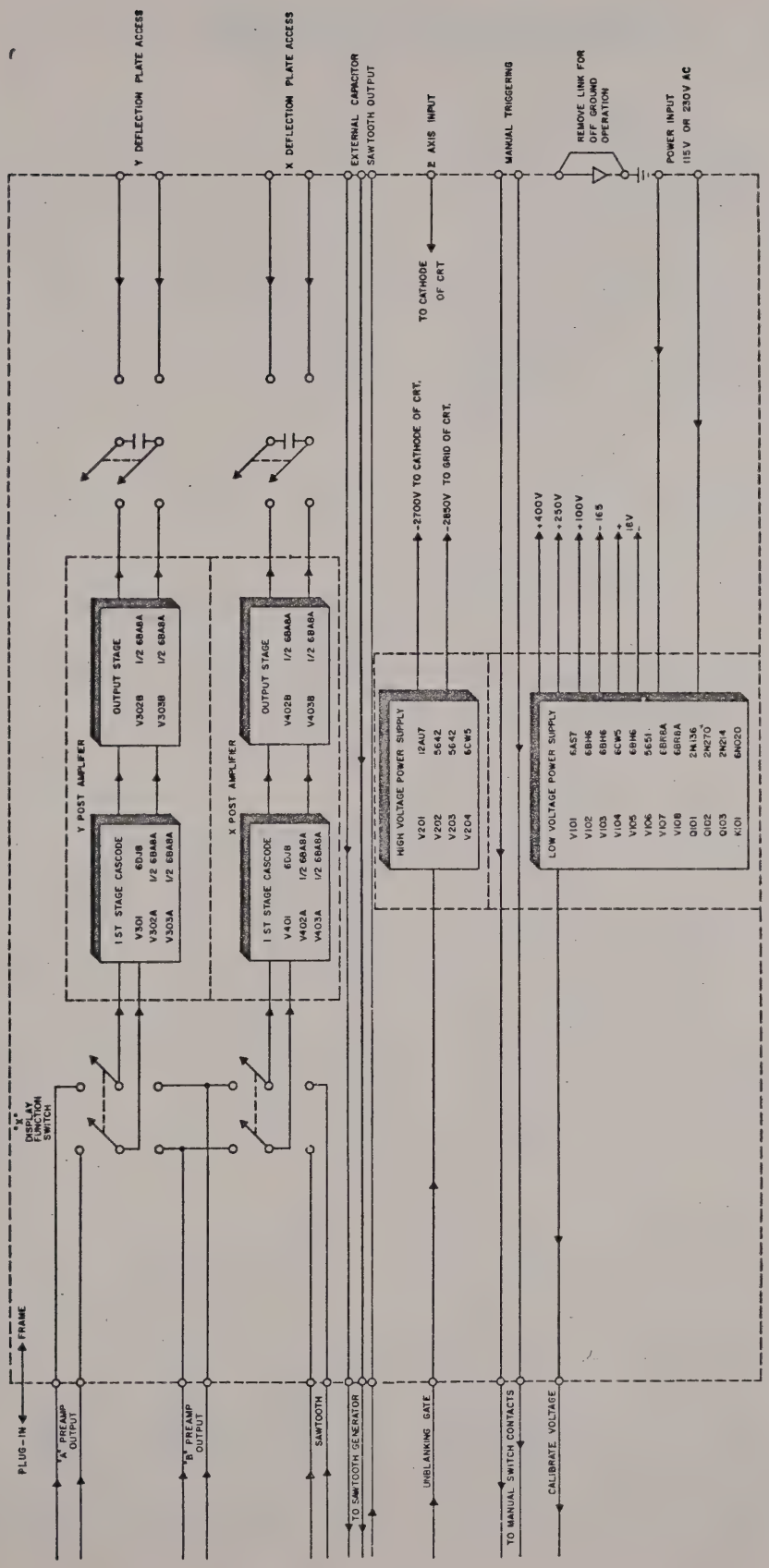

BLOCK DIAGRAM — TYPES 1100, 1100-R

CHANGES
Q101 IS TYPE 2N376A
Q102 IS TYPE 2N1372
Q103 IS TYPE 2N1372

SECTION IV
MAINTENANCE

4-1. REMOVAL OF PANELS

The side panels of the Types 1100 and 1120 are held in place by quick-disconnect fasteners. A small coin may be used to turn the large slotted-head screws in the fasteners. Rotate the fasteners about two turns to the left and pull the upper portion of the panel outward and upward. To remove the bottom panel, turn the instrument carefully on its back and remove the screws. Dust covers on the Types 1100-R and 1120-R are held in place with screws.

4-2. REVERSAL OF TILT FOOT

The tilt foot may be held at the front or rear. Holes are located in the front and rear frames to mount the brackets holding the tilt foot.

4-3. HIGH VOLTAGE SUPPLY

The circuits of the high voltage supply are readily accessible by removing three screws holding the cover. If the entire assembly is removed for any major service, *be certain to replace the insulating plate between the high voltage supply and frame* as the case of the high voltage supply must be grounded at only one point.

4-4. LOW VOLTAGE SUPPLY

All components for the low voltage supply are readily available after removing the side and bottom panels. The entire low voltage supply may be removed by unfastening the back panel and disconnecting the terminal strip with its plate from it. Remove the screws holding the upper 32 contact connector and pull it clear of the power supply. Remove the screws from the frame to the chassis and from the bulk-head. Finally, open the connecting plugs to the supply and slide it out through the rear. The connectors include a 12 prong connector, CRT heater connectors, two 3 prong signal connectors above the chassis and 3 prong transistor plug below the chassis.

4-5. CATHODE-RAY TUBE REPLACEMENT

To remove the CRT, disconnect the tube socket and loosen the clamp at the tube base. Remove the bezel and scale and pull the CRT through the front panel. After replacing the tube, reconnect the socket but do not fully tighten the base clamp. Using the alignment lever on the socket, and with the instrument operating with only a horizontal trace (use auto sweep), rotate the tube to align the trace with the scale. After replacing a CRT, the astigmatism control should be reset and the post amplifier sensitivities re-calibrated.

4-6. ILLUMINATED SCALE BULBS

Loosen the bulb socket mounts and slide them back for replacement of the scale illuminating bulbs. After replacement, slide the mount as far forward as possible and tighten the fastening screws.

4-7. TUBE REPLACEMENTS

No tube selection is required for any replacement in the Types 1100, 1100-R, 1120 and 1120-R.

4-8. STANDARD PARTS

Standard parts can be purchased from Analab, one of its authorized service depots, or obtained locally.

When ordering any part, please include all the information in the replacement parts list and the type and serial number of the instrument.

4-9. SPECIAL PARTS

In addition to standard parts, a number of special parts are made for Analab by other manufacturers. These are most readily obtained by ordering directly from Analab or its local service depot.

INSTALLATION OF TYPES 1100-R AND 1120-R

4-10. GENERAL PROCEDURES

Analab oscilloscopes are designed for continuous operation at a maximum ambient temperature of 40°C (104°F). Attention to the ambient temperature becomes particularly important in enclosed rack installations which may include other heat generating equipment or may not have proper ventilating ports.

When locating the oscilloscope in the rack assembly, be certain that there is a free flow of air below and above the instrument. Forced air ventilation is recommended, if necessary, to keep the ambient temperature below 40°C.

Angle supports at the bottom of the oscilloscope should be provided to share the load with the front panel mount and also to facilitate installation and removal. Do not support the scope on a shelf so as to prevent the flow of air through the bottom. *Similarly, if any service work is done on the instrument while it*

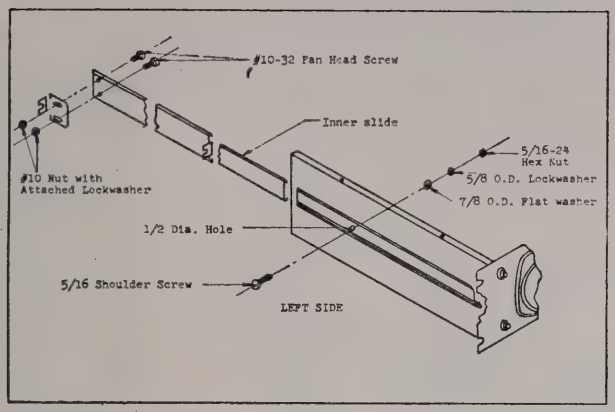

FIGURE A — INSTALLATION OF TYPE 9002 SLIDES ON RACK-MOUNTABLE ANALAB OSCILLOSCOPES

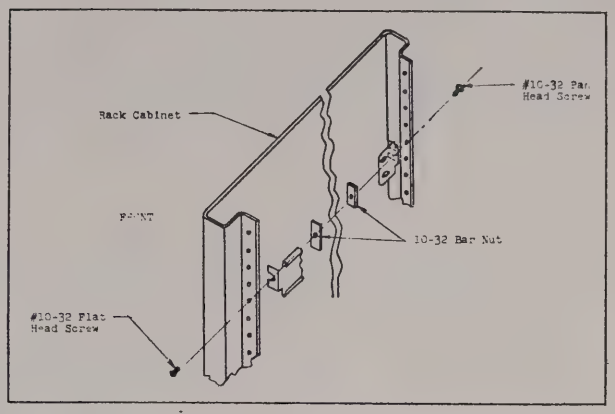

FIGURE B — MOUNTING OF OUTER TRACK OF TYPE 9002 SLIDES ON RACK CABINET

is operating out of the rack installation, support the scope on wooden blocks at least one inch off the bench surface so as to permit proper air flow.

The preferred method for mounting the oscilloscope is with Analab Type 9002 Tiltable slides. These slides not only carry the load, but make it convenient to service the instrument without the need for removing it completely from the rack frame. With Type 9002 slides, the instrument may be supported entirely forward of the rack assembly. The slides permit rotation of the scope for easy access to the bottom.

4-11. INSTALLATION OF TYPE 9002 SLIDES

If the Type 9002 Slides were ordered with the oscilloscope, the smaller inner slide will already have been mounted at the factory.

If there are no rear vertical angle supports in the rack cabinet, mounting is best accomplished by first installing gusset plates, fastened to the front angles of the frame. Gusset plates may be fabricated by the user for a particular installation or may be purchased from Analab.

The front panel of the oscilloscope is 7″ high. Determine the desired location of the 7″ panel in the rack installation and mark the position of the top and bottom extremities of the panel on the front vertical angle supports of the frame. Similarly, mark the rear angle supports. Also put four center-line marks on the front and rear angles, spacing them so as to be midway between the 7″ panel extremities and along the axis of the mounting holes in the vertical supporting angles. Front and rear markings must be accurate so that the slide tracks remain parallel.

In some rack frames, a hole will exist at the four center lines. If so, these holes should be at least $\frac{13}{64}$″ and be countersunk from the front for a flush fit of an 82° #10 flat-head screw. Drill and countersink the four holes if they do not exist.

If it is not necessary to have a flush mounting of the front panel of the scope to the vertical support angles, nor flush mounting of the slide support screws on the rear angles, then it will not be necessary to countersink the holes. Under these conditions, use the #10 pan-head screws that are provided, rather than the flat-head screws.

If the slides have been mounted at the factory, remove the left larger inner slide (see Figure A) and outer track by sliding them toward the rear and depressing the detent buttons. Separate the larger inner slide from the outer track.

See Fig. "B" for mounting outer track to cabinet.

Insert the larger inner slide into the outer track, from the rear, depressing the detent button to allow full insertion. Push the larger inner slide as far forward as possible until it is stopped by the detent button in the outer track.

Repeat procedure for the right outer track and larger inner slide.

You are now ready to mount the scope into the tracks. Holding the smaller inner slides in position with respect to the scope, slide the assembly into the larger inner slides, until stopped at the first detent position. In this position, the entire assembly may be rotated upward for access to the bottom of the scope.

To insert scope all the way into the rack frame, depress the detent buttons at the first stop, and then again at the second stop position. Continue pushing unit in so that larger inner slides moves all the way into the outer track.

Fasten scope to front vertical angles of frame at the four cut-outs in the front panel. (Manufacturers of rack cabinets generally furnish hardware for fastening equipment to the front angles.)

4-12. SERVICING THE RACK OSCILLOSCOPE

To service the oscilloscope from the top, remove the front panel mounting screws. Pull the assembly forward by the handles until the larger and smaller inner slides are extended as far as possible. *CAUTION: Be certain that the rack installation is heavy enough to*

prevent its tilting forward when the oscilloscope is extended. Remove the top cover. It may be necessary to depress the detents and move the scope forward to the first stop position in order to obtain access to the rear screw on the cover.

To service the scope from the bottom, pull it out to the farthest forward detent position. Tilt the assembly up carefully and rotate it backward until the scope rests on the front panels of the rack cabinet. *CAUTION:* The signal leads and power cord may not be long enough to leave them connected when tilting the unit upward. Remove bottom cover for service.

4-13. TEST PROCEDURE

X AND Y POST AMPLIFIERS, TYPES 1100 AND 1100-R

TEST EQUIPMENT AND ACCESSORIES

Analab Type 9001 Service Adapter to operate main frame with available plug-in
Ballantine Type 420 Precision Voltage Calibrator or equivalent
Hewlett-Packard Type 211A Square Wave Generator or equivalent
Analab Type 1100/700 Oscilloscope or equivalent

SET DISPLAY FUNCTION SWITCH TO A VS. B.

TEST	Y INPUT	X INPUT	OBSERVATION AND/OR ADJUSTMENT*
Focus and astigmatism	Grounded	Grounded	1. Turn instrument on and allow 5 minutes warm up. 2. Turn up intensity and adjust focus and astigmatism (R201 in main frame) for best spot size and uniformity over full screen area.
Y Post Gain	Use Ballantine Calibrator .2V P-P	Grounded	1. Set Y sensitivity adjust to give 5 cm of deflection about center of screen.
X Post Gain	Grounded	Use Calibrator .2V P-P	1. Set X sensitivity adjust to give 5 cm of deflection about center of screen.
Beam Finder	Use Calibrator .4V P-P	Use Calibrator .4V P-P	1. Turn beam finder clockwise and turn Y position knob to both extremes. Ends of trace should stay on screen. 2. Repeat (1) using X position knob.
Y Post Amplifier square wave response	Use H-P 211A. .4V P-P 100KC frequency	.4V 10 μsec saw (attenuated saw output from Analab scope)	1. Adjust square wave amplitude to 10 cm. 2. Measure rise time from 10 to 90%. Should be no greater than 0.7 μsec with no overshoot.
X Post Amplifier square wave response	.4V 10 μsec saw	H-P 211A. .4V P-P 100 KC	1. Repeat procedure for Y Post Amplifier using X Post Amplifier.

*Inability to meet specifications, when no adjustments are involved, indicates an off value or faulty component in the circuit under test.

LOW VOLTAGE POWER SUPPLIES ADJUSTMENTS

1. Energize Power Supply at nominal line. Observe that the delay relay operates 15-25 seconds later.

2. Measure the —165 voltage and adjust it to —165.0.

3. Measure the following voltages at nominal (115V) low (104V) and high (127V) line and check the regulation and ripple against the values tabulated below. *The voltages given below are not specifications.* They are the mean voltages based upon a random sampling of a number of production units and are meant to serve only as a guide to troubleshooting and servicing.

SUPPLY POTENTIALS

Measured with Weston Model 931 or equivalent.

Nominal	Range	Nominal	Range
400	402-418	—3.2	—2.7 to 3.6
250	243-253	—165	—165.0
100	100-104	—6.3 A.C.	*6.2 to 6.4
15.3	14.5-16.1		

*Measured at power transformer

4. *Typical Measurements with Line Voltage Variation*

Supply	Regulation	Ripple
—165 volts	±0.2%	5 mv p-p
100	±0.5	5
250	±0.5	25
400	±0.5	50
15.3	±1.0	30
—3.2	±2.0	30

Note 1. The best indication that a supply is not regulating prop-

erly is a sudden rise in ripple voltage, greatly in excess of these typical values, as the line voltage is varied over its range.

Note 2. In measuring the ripple voltage, exclude and ignore any RF, calibrator or saw signals that may appear at the point of measurement. To eliminate saw and other spurious signals, it is best to make the ripple measurements with the sweep and the input to the amplifiers shut off.

5. Measure the calibration signal and observe that it is 95-105 mv. (Use oscilloscope.)

6. Measure the voltage at the junction of R101 and R100 with VTVM. It should be 145 to 175 V D.C.

HIGH-VOLTAGE POWER SUPPLY CHECK

1. Turn Intensity Control counter clock-wise.
2. Switch Sweep Mode to "Manual."
3. Measure CRT cathode voltage supply $E_k = 2700V$ D.C. (Available at clock-wise end of focus control.)
4. Measure voltage drop from CRT cathode supply to CRT grid supply. +160V (Available between clock-wise ends of Intensity and Focus controls.)

ELECTRONIC SWITCH, X AND Y POST AMPLIFIERS, TYPES 1120, 1120-R

TEST	Y POST AMP. INPUT (TYPE 9001)	X POST AMP. INPUT (TYPE 9001)	Y DISPLAY FUNCTION (FRONT PANEL)	X DISPLAY FUNCTION (FRONT PANEL)	OBSERVATION AND/OR ADJUSTMENT
Focus and astigmatism	Gnd.	Gnd.	A vs. B		1. Turn instrument on and allow 5 minutes warm up. 2. Turn up intensity and adjust focus and astigmatism (R201 on main frame) for best spot size and uniformity over full screen area.
X Post Amplifier Gain	Gnd.	Ballantine Calibrator .2V P-P	A vs. B		1. Set X sensitivity adjust (R402) to give 5 cm of deflection about center of screen.
Y Post Amplifier and Electronic Switch Gain	Gnd.	Ballantine Calibrator .2V P-P	B	X1 SWP	1. Set Y sensitivity adjust (R302 on main frame) to give 5 cm of deflection about center of screen.
	Ballantine Calibrator .2V P-P	Gnd.	A	X1 SWP	2. Set Y sensitivity 2 (R922 on electronic switch TB901) to give 5 cm of deflection about center of screen. 3. If Y sensitivity 2 cannot be set to give proper sensitivity interchange V900 and V901 and repeat steps 1 and 2.
Chopped Mode Adjustment	Gnd.	Gnd.	A-B Chop.	X1 SWP (10 µsec/cm)	1. Adjust C904 and C905 (on electronic switch terminal strip) to obtain flatest possible chopper square wave over full range of A & B Separation control (Front panel), keeping settings approximately equal. 2. Set Multi Adjust (R940 on electronic switch chassis) to further flatten square wave. 3. Repeat steps 1 and 2 if necessary.
Beam Finder	Ballantine Calibrator .2V P-P	Ballantine Calibrator .2V P-P	A-B Chop	X5 SWP (1 µsec/cm)	1. Turn Beam Finder clockwise and turn Y Position Knob to both extremes. Ends of trace should stay on screen. 2. Repeat step 1 using X Position Knob.
A and B Channel square wave response	H.P. 211A .4V P-P 100KC freq.		A	X1 SWP (1 µsec/cm)	1. Adjust square wave amplitude to 10 cm. 2. Measure rise time from 10 to 90%. Should be no more than 0.7 µsec with less than 2% overshoot.
		H.P. 211A .4V P-P 100KC freq.	B	X1 SWP (1 µsec/cm)	3. Repeat steps 1 and 2 for B channel.
X Post Amplifier square wave response	.4V 10 µsec saw (Attenuated saw output from main frame)	H.P. 211A .4V P-P 100KC freq.	A vs. B		1. Repeat procedure for A and B Channel using X Post Amplifier.

4-14. TERMINAL BOARD LAYOUT

30	187K 1/2W 1/2%	R130	30
29	.002	C125	29
28	.005 ufd	C120	28
27	220K 1/2W	R128	27
26	2.2 Meg 1/2W	R127	26
25	68K 1/2W	R129	25
24	68K 1/2W	R126	24
23	.1 ufd	C117	23
22	464K 1/2W 1%	R121	22
21	.02 ufd	C116	21
20	301K 1/2W 1%	R120	20
19			19
18	430K 1W 5%	R102	18
17			17
16	100K 1/2W	R101	16
15	100K 1/2W	R100	15
14	150K 1W	R119	14
13	560K 1/2W	R104	13
12	931K 1/2W 1%	R110	12
11	.02 ufd	C114	11
10	1 Meg 1/2W	R105	10
9	806K 1/2W 1%	R111	9
8	301K 1/2W 1%	R113	8
7	464K	R112	7
6	.02 ufd	C112	6
5	39K 1/2W	R106	5
4	.02 ufd	C107	4
3	301K 1/2W 1%	R116	3
2	.02 ufd	C109	2
1	301K 1/2W 1%	R114	1

SIDE NEXT TO TUBE BASES

TB101 LOW VOLTAGE POWER SUPPLY 850 000 002

1	270 uuf 5%	C910	1
2	15K 1/2W	R908	2
3	100K 1/2W	R901	3
4	47K 1/2W	R939	4
5	24uuf 5%	C901	5
6	1N34A	CR901	6
7	1N34A	CR900	7
8	24uuf 5%	C900	8
9	15K 1/2W	R900	9
10	15K 1/2W	R916	10
11	1K 1/2W	R910	11
12	PADT-23	Q900	12
13	2.2K 1/2W	R909	13
14	15K 1/2W	R904	14
15	PADT-23	Q901	15
16	1N34A	CR903	16
17			17
18	1N34A	CR904	18
19	PADT-23	Q902	19
20	15K 1/2W	R913	20
21			21
22			22
23	.1 ufd	C916	23
24			24
25	100 1/2W	R943	25
26			26
27			27

TB900 ELECTRONIC SWITCH 850 000 014

1	2.7M 1/2W 5%	R903	1
2	1.2M 1/2W 5%	R911	2
3	8.2K 1/2W	R939	3
4	1N38A	CR902	4
5			5
6	20K 2W 5%	R907	6
7			7
8	8.2K 1/2W	R902	8
9	1.2M 1/2W 5%	R906	9
10	2.7M 1/2W 5%	R917	10
11			11
12	82.5K 1/2W 1%	R924, 24 C914	12
13	3.09K 1/2W 1%, R922 1K 1/10W	R923	13
14	3.48K 1/2W 1%	R921	14
15	82.5K 1/2W 1%	R920	15
16	82.5K 1/2W 1%	R926, 24 C915	16
17	3.48K 1/2W 1%	R932	17
18	3.48K 1/2W 1%	R931	18
19	82.5K 1/2W 1%	R928	19
20			20
21			21
22	6.04K 1/2W 1%	R925	22
23	82.5K 1/2W 1% 4.5-25 uuf	R934 C904	23
24	165K 1/2W 1%	R936	24
25	165K 1/2W 1%	R935	25
26	82.5K 1/2W 1% 4.5-25 uuf	R929 C905	26
27	6.04K 1/2W 1%	R938	27

SIDE NEXT TO CHASSIS

TB901 ELECTRONIC SWITCH 850 000 013

CHANGES

1. TB101.
   a. R100 IS 100K.
   b. R101 IS 100K.

4-14. TERMINAL BOARD LAYOUT (Continued)

SIDE NEXT TO CHASSIS

15	100K 1W 5%	R409	15
14			14
13	100K 1W 5%	R408	13
12	1.2K 1/2W	R406	12
11	1N54A	CR401	11
10	1.2K 1/2W	R407	10
9	1N54A	CR400	9
8	220K 1/2W .005uf	R411 R402	8
7	1.5M 1/2W	R412	7
6	2.74K 1/2W 1%	R404	6
5	2.74K 1/2W 1%	R405	5
4	590Ω 1/2W 1%	R401	4
3	100Ω 1/2W	R432	3
2			2
1	100Ω 1/2W	R433	1

TB401 X POST AMPLIFIER
850 000 001

SIDE NEXT TO CHASSIS

15	100K 1W 5%	R308	15
14			14
13	100K 1W 5%	R309	13
12	1.2K 1/2W	R307	12
11	1N54A	CR300	11
10	1.2K 1/2W	R306	10
9	1N54A	CR301	9
8	220K 1/2W .005uf	R311 C304	8
7	1.5M 1/2W	R312	7
6	2.74K 1/2W 1%	R304	6
5	2.74K 1/2W 1%	R305	5
4	768Ω 1/2W 1%	R301	4
3	100Ω 1/2W	R333	3
2			2
1	100Ω 1/2W	R332	1

TB301 Y POST AMPLIFIER
850 000 000

SIDE NEXT TO CHASSIS

1	8.2K 2W	R122	1
2			2
3	27K 1/2W	R143	3
4	56K 1/2W	R117	4
5	68K 1W	R145	5
6	10K 1/2W	R144	6
7	.047 ufd	C118	7
8			8
9	2N1372	Q102	9
10			10
11	2N1372	Q103	11
12			12
13	1.47K 1/2W 1%	R123	13
14	100Ω 1/2W	R125	14
15	47Ω 1W	R124	15

TB103 LOW VOLTAGE POWER SUPPLY
850 000 015

SIDE NEXT TO CHASSIS

1	100Ω 1/2w	R947	1
2			2
3	100Ω 1/2w	R948	3
4			4
5			5
6	27K 2w 5%	R949	6
7			7
8	20K 2w 5%	R950	8
9			9
10	.5 uf	C921	10
11	6.8K1/2w	R951	11
12	6.8K 1/2w	R952	12
13	.02 uf	C920	13
14	2.2M 1/2w	R953	14
15	130 uuf	C919	15

1.5uuf C922
1.5uuf C923

TB902 TRIGGER AMPLIFIER
850 000 016

4-15. REPLACEMENT PARTS

VENDOR CODE

AB	Allen Bradley
AMP	Amperite
ANA	Analab
AU	Automatic
AX	Amperex
BL	Bussman, Littlefuse
BX	Bendix
CE	Centralab
CG	Corning Glass
CL	Clarostat
CTS	Chicago Telephone Supply
EM	El Menco
ER	Erie
GE	General Electric
GU	Gudeman
HH	HH Smith
HO	Hopkins
IRC	International Resistance Co.
ITT	International Telephone
M	Motorola
RCA	RCA
RGTS	RCA, GE, Tung-Sol, Sylvania
PY	Pyramid
SO	Sangamo
SOL	Solitron
SP	Sprague
ST	Stackpole
SY	Sylvania
TI	Texas Instruments
TR	Transitron
WL	Ward Leonard

DESCRIPTION CODE

CE	Capacitor Electrolytic
CFGP	Capacitor Fixed General Purpose
CFM	Capacitor Fixed Miscellaneous
CFP	Capacitor Fixed Precision
CVC	Capacitor Ceramic Variable
RFC	Resistor Fixed Composition
RFF	Resistor Fixed Film
RFM	Resistor Fixed Metal Film
RFW	Resistor Wire Wound
RVC	Resistor Variable Composition
RVWW	Resistor Variable Wire Wound
SA	Same As

REPLACEMENT PARTS — TYPES 1100, 1100-R

RESISTORS

Symbol	Description	Vendor	Analab Part No.
R100	RFC ½W 10% 100K	AB	021 481 041
R101	RFC ½W 10% 100K	AB	021 481 041
R102	RFC 1W 5% 430K	AB	021 574 341
R103	RFC ½W 10% 220K	AB	021 482 241
R104	RFC ½W 10% 560K	AB	021 485 641
R105	RFC ½W 10% 1M	AB	021 481 051
R106	RFC ½W 10% 39K	AB	021 483 931
R107	RFW 20W 10% 3K	WL/SP	050 830 041
R108	SA R104		
R109	RFW 10W 10% 5K	WL/SP	059 850 041
R110	RFF ½W 1% 931K	TI	034 593 161
R111	RFF ½W 1% 806K	TI	034 580 661
R112	RFF ½W 1% 464K	CG	034 546 461
R113	RFF ½W 1% 301K	CG	034 530 161
R114	SA R113		
R115	RVC ¼W 50K 20%	CTS	011 150 301
R116	SA R113		
R117	RFC ½W 10% 56K	AB	021 485 631
R118	RVWW 2W 50	CTS	012 550 001
R119	RFC 1W 10% 150K	AB	021 581 541
R120	SA R113		
R121	SA R112		
R122	RFF 2W 5% 8.2K	CG	036 782 041
R123	RFF ½W 1% 1.47K	CG	034 514 741
R124	RFC 1W 10% 470	AB	021 584 711
R125	RFF ½W 10% 100	CG	034 810 031
R126	RFC ½W 10% 68K	AB	021 486 831
R127	RFC ½W 10% 2.2M	AB	021 482 251
R128	RFC ½W 10% 220K	AB	021 482 241
R129	SA R126		
R130	RFF ½W ½% 186K	CG	034 418 661
R131	RFW 7W 10% 20	SP	050 720 021
R134	RFC ½W 10% 1K	AB	021 481 021
R135	SA R134		
R136	SA R103		
R138	RFF 4W 10% 10K	CG	037 810 051
R139	RFC ½W 10% 100	AB	021 481 011
R140	RFC ½W 10% 1K	AB	021 481 021
R141	RFC ½W 10% 68K	AB	021 486 831
R142	RFC ½W 10% 560K	AB	021 485 641
R143	RFC ½W 10% 27K	AB	021 482 731
R144	RFC ½W 10% 10K	AB	021 481 031
R145	RFC 1W 10% 68K	AB	021 586 831
R201	RVC 1W 50K 20%	CTS	011 450 301
R202	SA R103		
R203	RFC ½W 10% 33K	AB	021 483 331
R204	RFF 1W 1% 6.81M	TI	035 568 171
R205	SA R204		
R206	RFF ½W 1% 4.64M	TI	034 546 472
R207	RVC ¼W 5M 20%	CTS	011 150 501
R208	RFC 2W 10% 8.2M	AB	021 688 251
R209	SA R208		
R210	SA R208		
R211	RFC ½W 10% 2.2M	AB	021 482 251
R212	SA R207		
R213	SA R208		
R214	SA R208		
R215	SA R208		
R216	RFC ½W 10% 470K	AB	021 484 741
R217	RFC 2W 10% 150K	AB	021 681 541
R220	SA R106		
R221	RFC ½% 10% 3.9K	AB	021 483 921
R222	RFC ½W 10% 82K	AB	021 488 231
R223	RFC ½W 10% 2.7M	AB	021 482 751
R224	RFC ½W 10% 100K	AB	021 481 041
R225	SA R221		
R226	SA R204		
R227	RFC ½W 10% 56K	AB	021 485 631
R301	RFF ½W 1% 768	CG	034 576 831
R302	RVC ¼W 20% 500	CTS	011 150 101
R303	RVC ¼W 5K 20%	CE	011 150 203
R304	RFF ½W 1% 2.74K	CG	034 527 441
R305	SA R304		
R306	RFC ½W 10% 1.2K	AB	021 481 221
R307	SA R306		
R308	RFF 1W 5% 100K	CG	035 710 061
R309	SA R308		
R310	RFF 2W 1% 17.4K	CG	036 517 451
R311	SA R103		
R312	RFC ½W 10% 1.5M	AB	021 481 551
R228	RFC ½W 10% 2.28M	AB	021 482 251
R229	RFC ½W 10% 100	AB	021 481 011
R146	RFC 1W 10% 5.6Ω	AB	021 580 001
R147	RFC 1W 10% 5.6Ω	AB	021 580 001
R148	RFC 4W 10% 47Ω	AB	037 847 021
R149	RFC 4W 10% 47Ω	AB	037 847 021

Symbol	Description	Vendor	Analab Part No.
R313	RFC ½W 10% 560	AB	021 485 611
R314	RFF 2W 1% 200K	CG	036 520 062
R315	SA R314		
R316	RFF 7W 5% 7.5K	CG	030 775 041
R317	SA R316		
R318	RFF 4W 5% 7.85K	CG	037 778 541
R319	SA R318		
R320	RFC ½W 10% 2.2M	AB	021 482 251
R321	SA R320		
R322	SA R105		
R323	SA R105		
R330	SA R224		
R331	SA R224		
R332	SA R125		
R333	SA R125		
R401	RFF ½W 1% 590	CG	034 559 031
R402	SA R302		
R403	RVC ¼W 5K 20%	CE	011 150 202
R404	SA R304		
R405	SA R304		
R406	SA R306		
R407	SA R306		
R408	SA R308		
R409	SA R308		
R410	RFF 2W 1% 17.4K	CG	036 517 451
R411	SA R103		
R412	SA R312		
R413	SA R313		
R414	SA R314		
R415	SA R314		
R416	SA R316		
R417	SA R316		
R418	SA R318		
R419	SA R318		
R420	SA R320		
R421	SA R320		
R423	RFF ½W ½% 1.65K	CG	034 416 541
R425	RFF ½W ½% 412	CG	034 441 231
R427	RFC ½W 10% 27K	AB	021 482 731
R428			
R430	SA R224		
R431	SA R224		
R432	SA R125		
R433	SA R125		
R434	SA R125		

TUBES

Symbol	Description	Vendor	Analab Part No.
V101	Tube Electron 6AS7 GA	GE	203 386 201
V102	Tube Electron 6BH6	RGTS	200 576 302
V103	SA V102		
V104	Tube Electron EL86/6CW5	AX	200 596 301
V105	SA V102		
V106	Tube Electron 5651	AX	200 670 601
V107	Tube Electron 6BR8	RGTS	203 596 303
V108	Tube Electron 6BR8	RGTS	203 596 303
V200	Tube Cathode Ray 5AQP7A	ANA	223 307 001
V200	Tube Cathode Ray 5AQP1A	ANA	223 401 001
V200	Tube Cathode Ray 5AQP11A	ANA	223 511 001
V201	Tube Electron 12AU7	RGTS	203 394 301
V202	Tube Electron 5642	SY	200 211 101
V203	SA V202		
V204	Tube Electron EL86/6CW5	AX	200 596 301
V301	Tube Electron 6DJ8/ECC88	AX	203 396 302
V302	Tube Electron 6BA8A	RGTS	203 596 301
V303	SA V302		
V401	SA V301		
V402	SA V302		
V403	SA V302		

SEMI-CONDUCTORS

Symbol	Description	Vendor	Analab Part No.
CR100	Semi Conductor Diode Silicon	SOL	234 900 002
CR101	SA CR100		
CR102	SA CR100		234 900 002
CR103	SA CR100		234 900 002
CR104	SA CR100		
CR105	SA CR100		
CR106	Semi Conductor Diode Silicon	ITT	234 424 091
CR107	SA CR106		
CR300	Semi Conductor Diode 1N54A	ER	233 300 541
CR301	SA CR300		
CR400	SA CR300		
CR401	SA CR300		

LAMPS

Symbol	Description	Vendor	Analab Part No.
I101	Lamp Incandescent #47	GE	251 434 001
I102	SA I101		

RELAYS

Symbol	Description	Vendor	Analab Part No.
K101	Relay, Time Delay 20 sec 6N020T	AMP/OR	262 010 101

FUSES

Symbol	Description	Vendor	Analab Part No.
F101	Resistor Fuse Cartridge 1½A SB (230V operation)	BL	024 815 201
F101	Resistor Fuse Cartridge 3A SB (115V operation)	BL	024 830 201
F102	Resistor Fuse 5A Pigtailed	BL	024 650 201

INDUCTORS & TRANSFORMERS

Symbol	Description	Vendor	Analab Part No.
T101	Transformer, Power	ANA	171 100 001
T200	Transformer, HV	ANA	173 300 001
L201	Inductor, Fixed, Ferrite 10 mh	ANA	154 510 501

TRANSISTORS

Symbol	Description	Vendor	Analab Part No.
Q101	Transistor 2N376A	M	181 703 761
Q102	Transistor 2N1372	TI	181 213 721
Q103	Transistor 2N1372	TI	181 213 721

SWITCHES

Symbol	Description	Vendor	Analab Part No.
S100	Switch Toggle SPST	HH	272 010 101
S301	Switch, Slide DPDT	ST	271 020 201
S302	Switch Rotary Beam Finder	ANA	270 000 008
S303	SA S301		
S400	Switch Rotary X Function	ANA	270 000 007
S401	SA S301		
S403	SA S301		

CAPACITORS

Symbol	Description	Vendor	Analab Part No.
C101	CE 150 µf 150V Tubular	SO/PY	091 153 003
C102	CE 150 µf 150V Twist Lock Mount	SO/PY	091 153 002
C103	CE 150 µf 250V Twist Lock Mount	SO/PY	091 153 001
C104	SA C103		
C105	CE 60 µf 200V Tubular	SO/PY	091 602 001
C106	SA C105		
C107	CFGP Ceramic .02 µf 500V	ER	112 620 501
C108	CE 10 µf 350V Tubular	SO/PY	091 102 001
C109	SA C107		
C110	CE 2000 µf 30V Twist Lock Mount	SO/PY	091 204 001
C111	SA C108		
C112	SA C107		
C114	SA C107		
C116	SA C107		
C117	CFP M.M. .1 µf 20%	PO	089 910 601
C118	CFGP Ceramic 0.047 µf 100V	ER	112 247 501
C119	CPF Ceramic .001 µf 20% 500V	ER	084 910 401
C120	CFP Ceramic .005 µf 20% 500V	ER	084 950 401
C121	SA C107		
C122	CE 10 µf 50V Tubular	SP	091 102 002
C124	CFP Paper 10% 0.1 µf 600V	EM	086 810 601
C125	CFGP Ceramic .002 µf 500V	ER	084 920 401
C126	SA C207	In rack units only	
C127	SA C207	In rack units only	
C128	SA C207	In rack units only	
C129	SA C207	In rack units only	

Symbol	Description	Vendor	Analab Part No.
C200	CFM Ceramic 3KV .0082 µf	ER	121 368 241
C201	SA C200		
C202	SA C200		
C203	SA C124		
C204	SA C200		
C205	CFM Ceramic 3KV .0022	ER	121 362 241
C206	CFP Ceramic 20% .002 µf 500V	ER	084 920 401
C207	CFP Ceramic 20% .005 µf 500V	ER	084 950 401
C208	SA C206		
C209	CFP Mica 5% 68 µµf	EM	082 768 201
C210	SA C207		
C211	SA C200		
C212	SA C107		
C300	CFP Ceramic 10% 0.33 µµf	ST	085 833 001
C301	SA C300		
C302	CFP Mica 5% 10 µµf	EM	082 710 201
C303	SA C302		
C304	SA C207		
C305	CFP Ceramic 20% 50 µµf	ER	084 950 201

Symbol	Description	Vendor	Analab Part No.
C400	CFP Comp. 10% .15 µµf	ST	085 815 001
C401	SA C400		
C402	SA C207		
C403	SA C107		
C405	SA C305		

TERMINAL BOARDS

TB101	Terminal Board Assembly LV Supply	ANA	850 000 002
TB102	Terminal Board Assembly, XFMR	ANA	522 110 009
TB103	Terminal Board Assembly LV Supply	ANA	850 000 015
TB104	Terminal Strip, Barrier	CJ	521 410 201
TB201	Terminal Board HV	ANA	522 210 004
TB301	Terminal Board Assembly Y Post Amp	ANA	850 000 000
TB302	Terminal Board Post Amplifier	ANA	522 310 009
TB401	Terminal Board Assembly X Post Amp	ANA	850 000 001

TYPES 1120, 1120-R — PARTS PECULIAR

RESISTORS

Symbol	Description	Vendor	Analab Part No.
R303	RVC ¼W 20% 5K	CE	011 150 204
R434	RFC ½W 10% 1 Meg.	AB	021 481 051
R900	RFC ½W 10% 15K	AB	021 481 531
R901	RFC ½W 10% 100K	AB	021 481 041
R902	RFC ½W 10% 8.2K	AB	021 488 221
R903	RFC ½W 5% 2.7M	AB	021 472 751
R904	RFC ½W 10% 15K	AB	021 481 531
R905	RFC ½W 10% 1K	AB	021 481 021
R906	RFC ½W 5% 1.2M	AB	021 471 251
R907	RFC 2W 5% 20K	AB	021 672 031
R908	RFC ½W 10% 15K	AB	021 481 531
R909	RFC ½W 10% 2.2K	AB	021 482 221
R910	RFC ½W 10% 1K	AB	021 481 021
R911	RFC ½W 5% 1.2M	AB	021 471 251
R912	RFC ½W 10% 1K	AB	021 481 021
R913	RFC ½W 10% 15K	AB	021 481 531
R914	RFF ½W 10% 8.2K	AB	021 488 221
R915	RFF ½W 1% 6.04K	CG	034 560 441
R916	RFC ½W 10% 15K	AB	021 481 531
R917	RFC ½W 5% 1.1M	AB	021 472 751
R918	RFC ½W 10% 100	AB	021 481 011
R919	RFC ½W 10% 100	AB	021 481 011
R920	RFF ½W 1% 82.5K	CG	034 582 551
R921	RFF ½W 1% 3.48K	CG	034 534 841
R922	RVC .1W 30% 1K	ANA	011 010 203
R923	RFF ½W 1% 3.09K	CG	034 530 941
R924	RFF ½W 1% 82.5K	CG	034 582 551
R925	RFF ½W 1% 6.04K	CG	034 560 441
R926	RFF ½W 1% 82.5K	CG	034 582 551
R927	RVC ¼W 2K 20%	ANA	011 120 202
R928	RFF ½W 1% 82.5K	CG	034 582 551
R929	RFF ½W 1% 82.5K	CG	034 582 551
R930	RFC ½W 10% 100	AB	021 481 011
R931	RFF ½W 1% 3.48K	CG	034 534 841
R932	RFF ½W 1% 3.48K	AB	034 534 841
R933	RFC ½W 10% 100	AB	021 481 011
R934	RFF ½W 1% 82.5K	CG	034 582 551
R935	RFF ½W 1% 165K	CG	034 516 561
R936	RFF ½W 1% 165K	CG	034 516 561
R937	RFC ½W 10% 100	AB	021 481 011
R938	RFF ½W 1% 6.04K	CG	034 560 441
R939	RFC ½W 10% 47K	AB	021 484 731
R940	RVC ½W 20% 10K	ANA	011 110 302
R941	RF Comp. 2W 10% 22K	AB	021 682 231
R942	RFC ½W 10% 1K	AB	021 481 021
R943	RFC ½W 10% 100	AB	021 481 011
R944	RFC ½W 10% 10	AB	021 481 001
R945	RFC ½W 10% 56K	AB	021 485 631
R946			
R947	RFC ½W 10% 100	AB	021 481 011
R948	RFC ½W 10% 100	AB	021 481 011
R949	RFC 2W 5% 27K	AB	021 672 731
R950	RFC 2W 5% 20K	AB	021 672 031
R951	RFC ½W 10% 6.8K	AB	021 486 821
R952	RFC ½W 10% 6.8K	AB	021 486 821
R953	RFC ½W 10% 2.2M	AB	021 482 251

CAPACITORS

Symbol	Description	Vendor	Analab Part No.
C900	CFP Mica 5% 24 µµf	EM	082 724 201
C901	CFP Mica 5% 24 µµf	EM	082 724 201
C902	CFP Mica 5% 24 µµf	EM	082 724 201
C903	CFP Mica 5% 24 µµf	EM	082 724 201
C904	CVC 7-45 µµf	ER/CE	073 452 001
C905	CVC 7-45 µµf	ER/CE	073 452 001
C906	CFP Comp 10% 1.5 µµf	ST	085 815 101
C907	CFP Comp 10% 1.5 µµf	ST	085 815 101
C908	CFP Comp 10% 1.5 µµf	ST	085 815 101
C909	CFP Comp 10% 1.5 µµf	ST	085 815 101
C910	CFP Mica 5% 270 µµf	EM	082 727 301
C911	CE 2 µf 50V	PY	091 201 001
C912	CFP Ceramic 500V .005 20%	ER	084 950 401
C913	CFP Ceramic 500V .005 20%	ER	084 950 401
C914	CFP Mica 5% 24 µµf	EM	082 724 201
C915	CFP Mica 5% 24 µµf	EM	082 724 201
C916	CFP M.M. 20% .1 µf 200V	PO	089 910 601
C917	CFP Paper 10% .1 µf 600V	EM	086 810 601
C918	CFGP Ceramic 500V .02 µf	ER	112 620 501
C919	CFP Mica 5% 130 µµf	EM	082 713 301
C920	CFGP Ceramic 500V .02 µf	ER	112 620 501
C921	CFP Met. Paper 20% 0.5 µf	HO	087 950 601
C922	CFP Comp. 10% 1.5 µµf	ST	085 815 101
C923	CFP Comp. 10% 1.5 µµf	ST	085 815 101

TUBES

V900	Tube Electron 12AT7	RGTS	203 394 303
V901	Tube Electron 12AT7	RGTS	203 394 303
V902	Tube Electron 12AU7	RGTS	203 374 301
V903	Tube Electron 6021	RAY	203 316 301

SEMICONDUCTOR DIODES

CR900	Semiconductor Diode 1N34A	ER/SY	233 300 341
CR901	Semiconductor Diode 1N34A	ER/SY	233 300 341
CR902	Semiconductor Diode 1N38A	ER/SY	233 400 381
CR903	Semiconductor Diode 1N34A	ER/SY	233 300 341
CR904	Semiconductor Diode 1N34A	ER/SY	233 300 341

TRANSISTORS

Q900	Transistor PNP Germanium PADT-23 AX		181 100 231
Q901	Transistor PNP Germanium PADT-23 AX		181 100 231
Q902	Transistor PNP Germanium PADT-23 AX		181 100 231

SWITCHES

S900	Switch, Rotary, Y Display Function	ANA	270 000 011
S901	Switch, Rotary, X Display Function	ANA	270 000 012
S902	Switch, Slide, DPDT	ST	271 020 201

TERMINAL BOARDS

TB900	Terminal Board Assembly	ANA	850 000 014
TB901	Terminal Board Assembly	ANA	850 000 013
TB902	Terminal Board Assembly	ANA	850 000 016

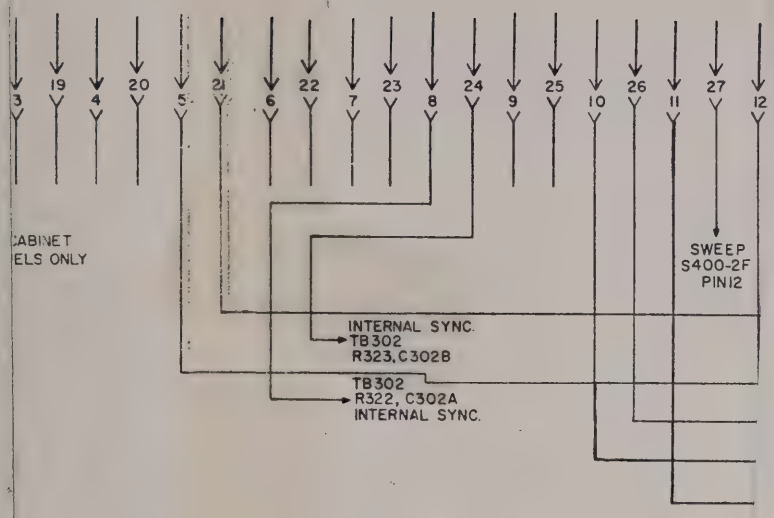

*THESE COMPONENTS

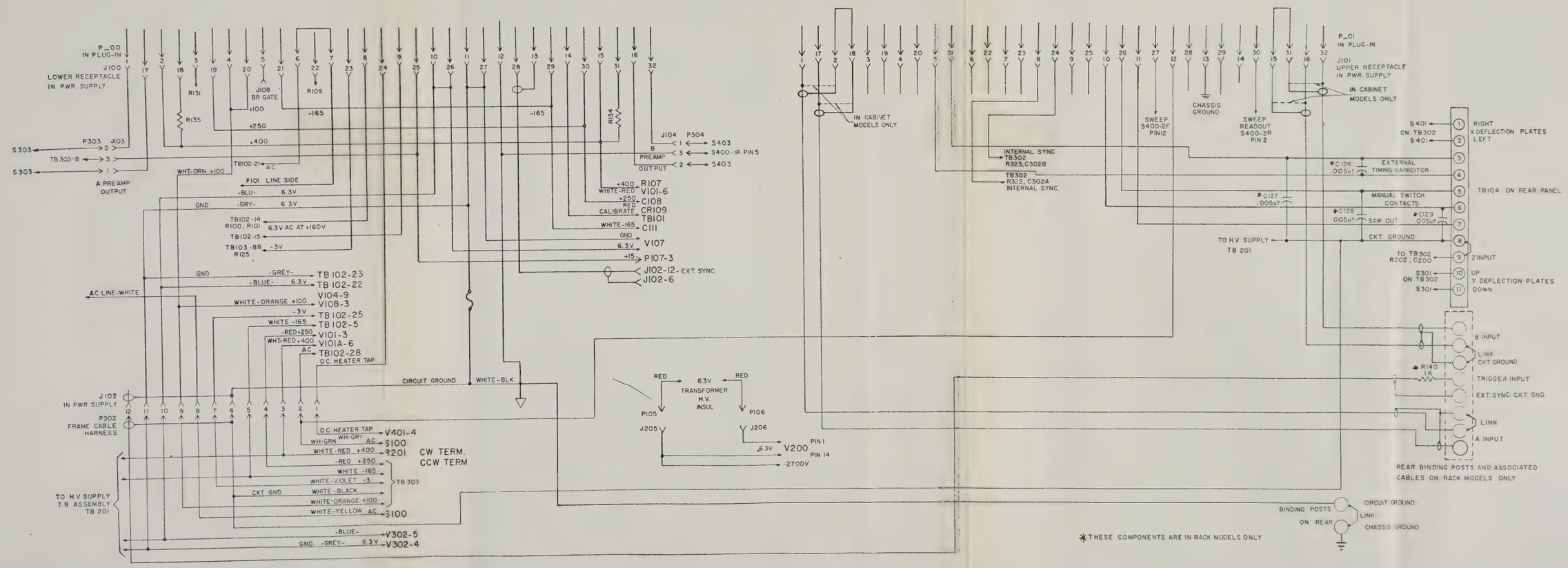
CABLE ASSEMBLY, MAIN FRAME
Drawing No. 871 100 001
P_00 IN PLUG-IN
J100 LOWER RECEPTACLE IN PWR. SUPPLY
P303 J103
S303
TB 303-8
A PREAMP OUTPUT
R131
R135
J108 BR GATE
R109
+100
-165
+250
+400
WHT-ORN. +100
TB102-21 AC
F101 LINE SIDE
-BLU- 6.3V
GND -GRY- 6.3V
TB102-14 R100, R101 6.3V AC AT +160V
TB102-15
TB103-8B R125 -3V
R134
J104 P304
PREAMP OUTPUT
S403
S400-IR PIN 5
+400 WHITE-RED R107
V101-6
+250 RED C108
CALIBRATE CR109
TB101
WHITE-165 C111
GND
6.3V V107
+15 P107-3
J102-12- EXT. SYNC
J102-6
GND -GREY- TB 102-23
-BLUE- 6.3V TB 102-22
AC LINE-WHITE
V104-9
WHITE-ORANGE +100 V108-3
-3V TB 102-25
WHITE -165 TB 102-5
-RED+250 V101-3
WHT-RED+400 V101A-6
AC TB102-28
DC HEATER TAP
CIRCUIT GROUND
WHITE-BLK
J102 IN PWR SUPPLY
P302 FRAME CABLE HARNESS
DC HEATER TAP V401-4
WH-GRN WH-GRY AC S100
WHITE-RED +400 R201
CW TERM.
CCW TERM
-RED +250
WHITE -165
WHITE-VIOLET -3
TB 303
CKT GND. WHITE-BLACK
WHITE-ORANGE +100
WHITE-YELLOW AC S100
TO H.V. SUPPLY T.B. ASSEMBLY TB 201
-BLUE- V302-5
GND. -GREY- 6.3V V302-4
RED
6.3V TRANSFORMER H.V. INSUL
RED
P105
P106
J205
J206
6.3V V200
PIN 1
PIN 14
-2700V
IN CABINET MODELS ONLY
INTERNAL SYNC TB302 R323, C302A
TB302 R322, C302A INTERNAL SYNC.
SWEEP S400-2F PIN12
CHASSIS GROUND
SWEEP READOUT S400-2R PIN 2
P_01 IN PLUG-IN
J101 UPPER RECEPTACLE IN PWR. SUPPLY
IN CABINET MODELS ONLY
S401 ON TB302 S401
RIGHT X DEFLECTION PLATES LEFT
*C126 .005uf
EXTERNAL TIMING CAPACITOR
*C127 .005uf
MANUAL SWITCH CONTACTS
*C128 .005uf
SAW OUT
*C129 .005uf
CKT. GROUND
TB104 ON REAR PANEL
TO H.V. SUPPLY TB 201
TO TB302 R202, C200
Z INPUT
S301 ON TB302 S301
UP Y DEFLECTION PLATES DOWN
B INPUT
LINK
CKT GROUND
*R140 1K
TRIGGER INPUT
EXT. SYNC. CKT. GND.
LINK
A INPUT
REAR BINDING POSTS AND ASSOCIATED CABLES ON RACK MODELS ONLY
BINDING POSTS ON REAR
CIRCUIT GROUND
LINK
CHASSIS GROUND
*THESE COMPONENTS ARE IN RACK MODELS ONLY

LOW VOLTAGE POWER SUPPLY

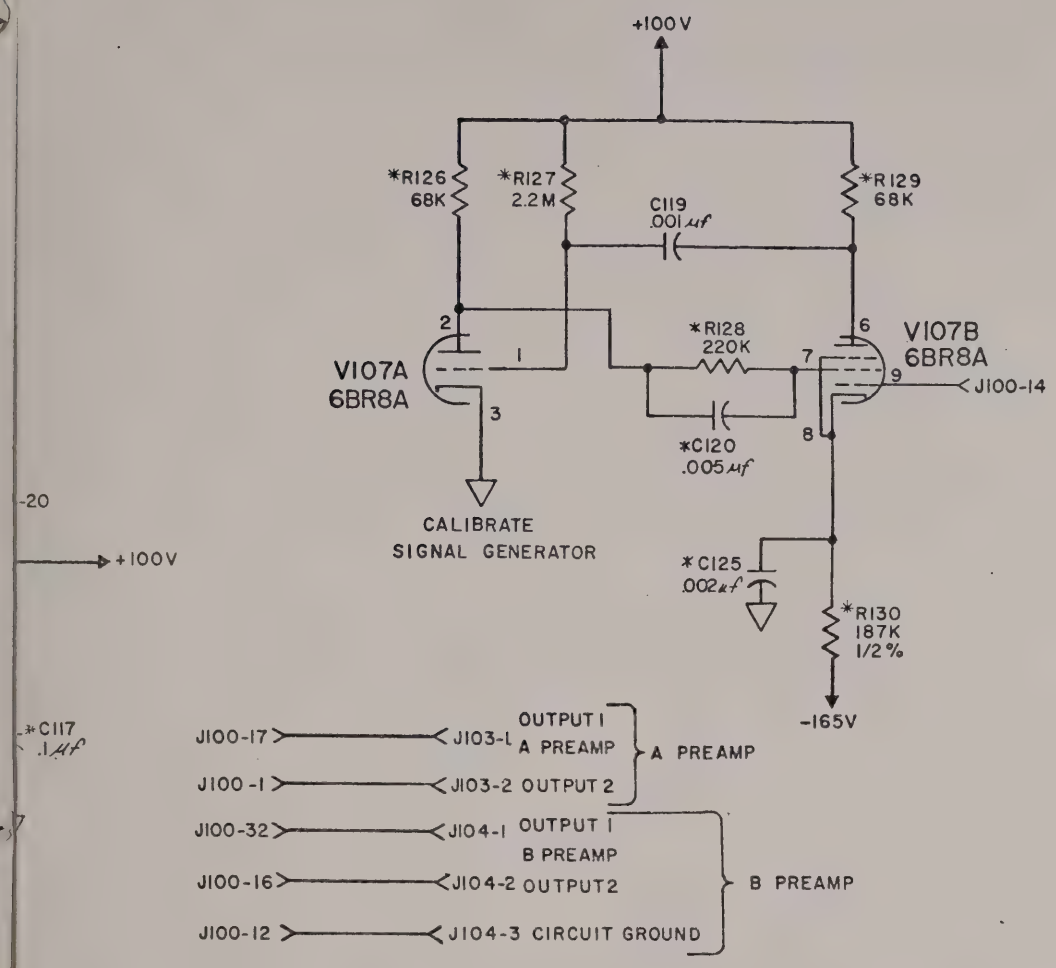

NOTES:
1. ✳ ON TB101.
2. ALL RESISTORS 1/2W UNLESS OTHERWISE NOTED.
3. ALL RESISTORS 10% UNLESS OTHERWISE NOTED.
4. △ ON TB103.
5. ⏚ ON TB102.
6. ○ TERMINAL ON TB102.
7. SELECTED FOR MINIMUM HUM IN OFF GROUND OPERATION.
8. ALL CAPACITORS IN uuf UNLESS OTHERWISE NOTED.

CHANGES

1. HEATER OF V107 6BR8A MOVED FROM HEATER WINDING 22-23 TO WINDING 14-15.
2. C101 AND C102 CHANGED TO 150 μf.
3. R101 CHANGED TO 100K; CONNECTED BETWEEN TERMINAL (15) OF T101 AND CIRCUIT GROUND.
4. R117 CHANGED TO 56K.
5. R130 CHANGED TO 186K.
6. R100 CHANGED TO 100K.
7. R146 AND R147 EACH 5.6Ω 1W, WIRED IN PARALLEL, ARE PLACED IN SERIES WITH K101 AT PINS 3, 4.
8. R148 AND R149 EACH 47Ω 4W, WIRED IN PARALLEL, ARE PLACED BETWEEN TERMINAL (16) OF T101 AND THE JUNCTION OF C105 AND C106.

Drawing No. 911 100 100

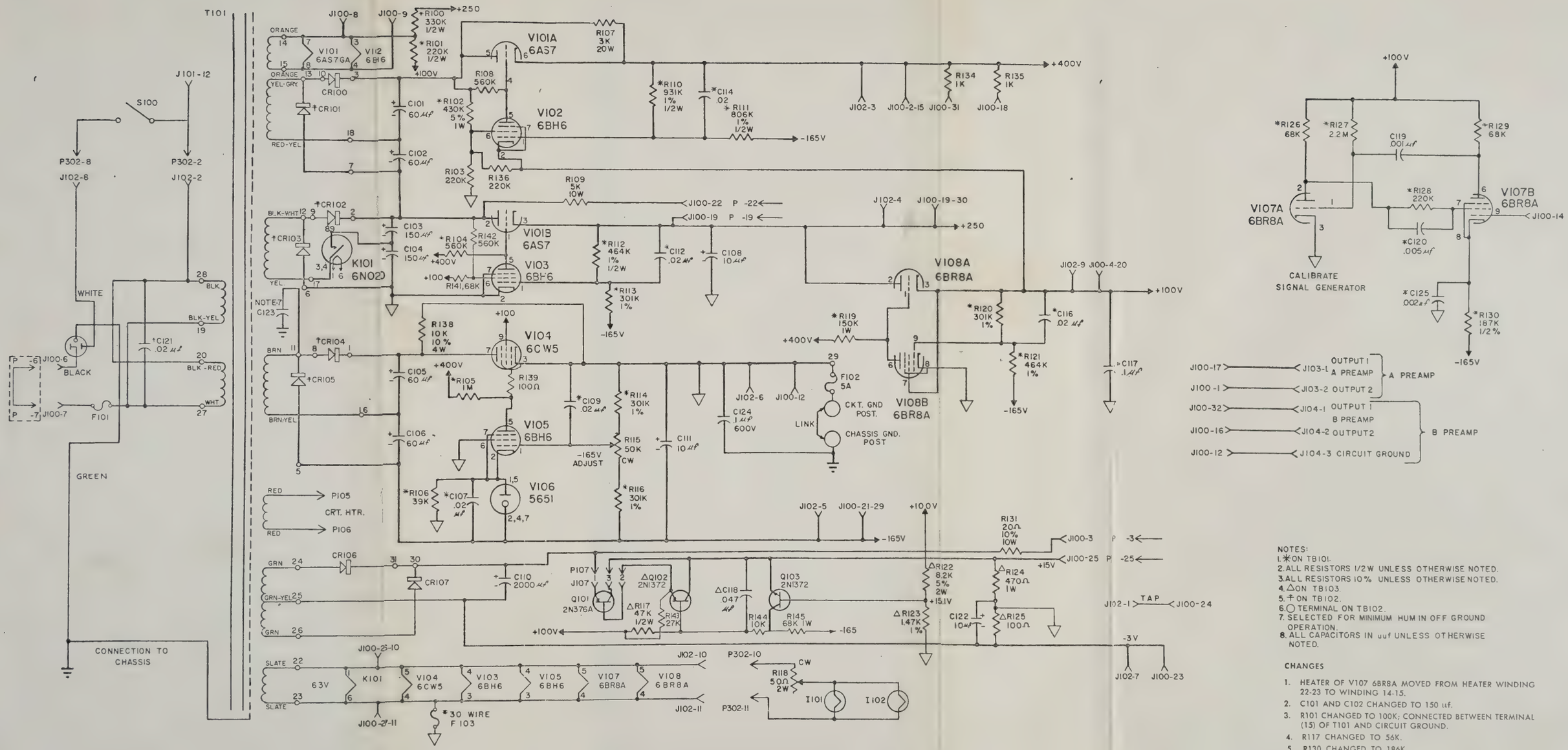

NOTES:
1. * ON TB101.
2. ALL RESISTORS 1/2W UNLESS OTHERWISE NOTED.
3. ALL RESISTORS 10% UNLESS OTHERWISE NOTED.
4. Δ ON TB103.
5. ‡ ON TB102.
6. ◯ TERMINAL ON TB102.
7. SELECTED FOR MINIMUM HUM IN OFF GROUND OPERATION.
8. ALL CAPACITORS IN µuf UNLESS OTHERWISE NOTED.

CHANGES

1. HEATER OF V107 6BR8A MOVED FROM HEATER WINDING 22-23 TO WINDING 14-15.
2. C101 AND C102 CHANGED TO 150 µf.
3. R101 CHANGED TO 100K; CONNECTED BETWEEN TERMINAL (15) OF T101 AND CIRCUIT GROUND.
4. R117 CHANGED TO 56K.
5. R130 CHANGED TO 186K.
6. R100 CHANGED TO 100K.
7. R146 AND R147 EACH 5.6Ω 1W, WIRED IN PARALLEL, ARE PLACED IN SERIES WITH K101 AT PINS 3, 4.
8. R148 AND R149 EACH 47Ω 4W, WIRED IN PARALLEL, ARE PLACED BETWEEN TERMINAL (16) OF T101 AND THE JUNCTION OF C105 AND C106.

LOW VOLTAGE POWER SUPPLY

Drawing No. 911 100 100

RF HIGH VOLTAGE SUPPLY

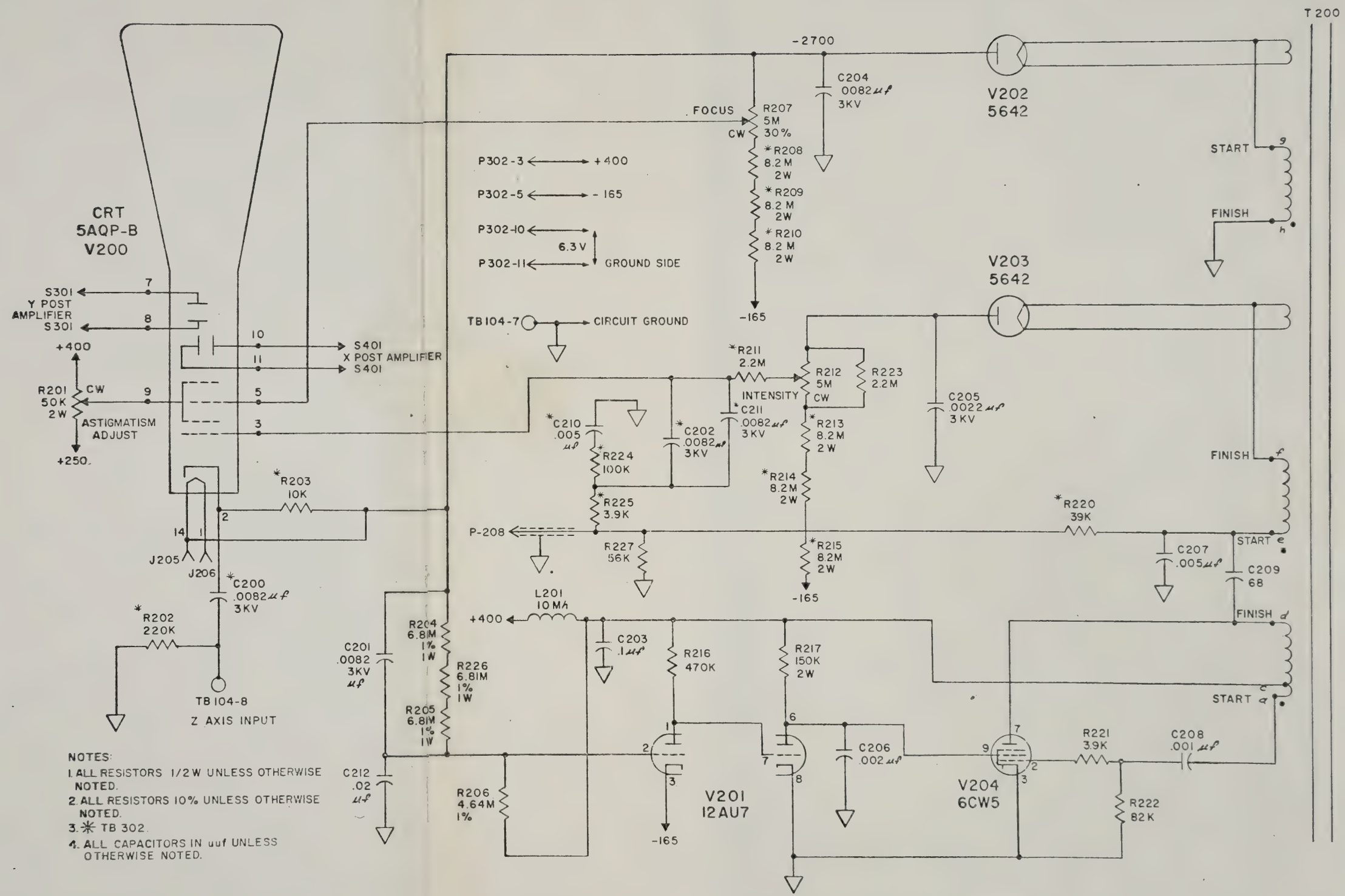

NOTES:

1. ALL RESISTORS 1/2W UNLESS OTHERWISE NOTED.
2. ALL RESISTORS 10% UNLESS OTHERWISE NOTED.
3. ✳ TB 302.
4. ALL CAPACITORS IN uuf UNLESS OTHERWISE NOTED.

CHANGES

1. R203 CHANGED TO 33K.
2. R223 IS 2.7M.
3. R228 2.2M ADDED BETWEEN R207 AND —2700V SUPPLY.
4. R229, 100Ω ADDED BETWEEN V204 PIN 3 AND GROUND.

Drawing No. 911 100 200

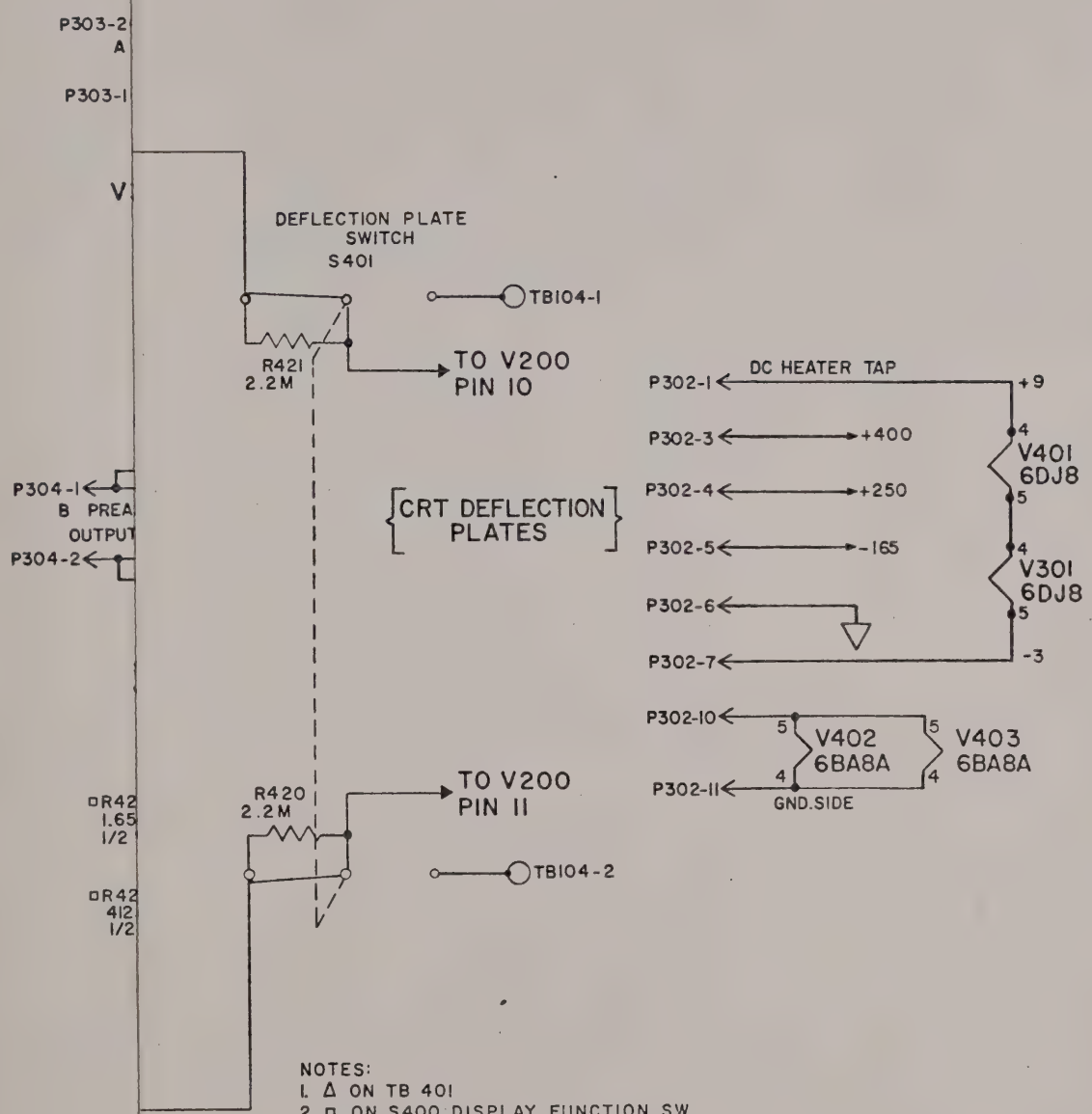

NOTES:
1. Δ ON TB 401
2. □ ON S400 DISPLAY FUNCTION SW
3. ALL RESISTORS 1/2, 10% UNLESS OTHERWISE NOTED
4. ALL CAPACITORS IN uuf UNLESS OTHERWISE NOTED.
5. VOLTAGES SHOWN ARE TYPICAL, MEASURED WITH 20,000Ω/V METER, WITH NO INPUT VOLTAGE, FUNCTION SWITCH ON A vs B, SPOT CENTERED.

X POST AMPLIFIER

Drawing No. 911 100 300-1

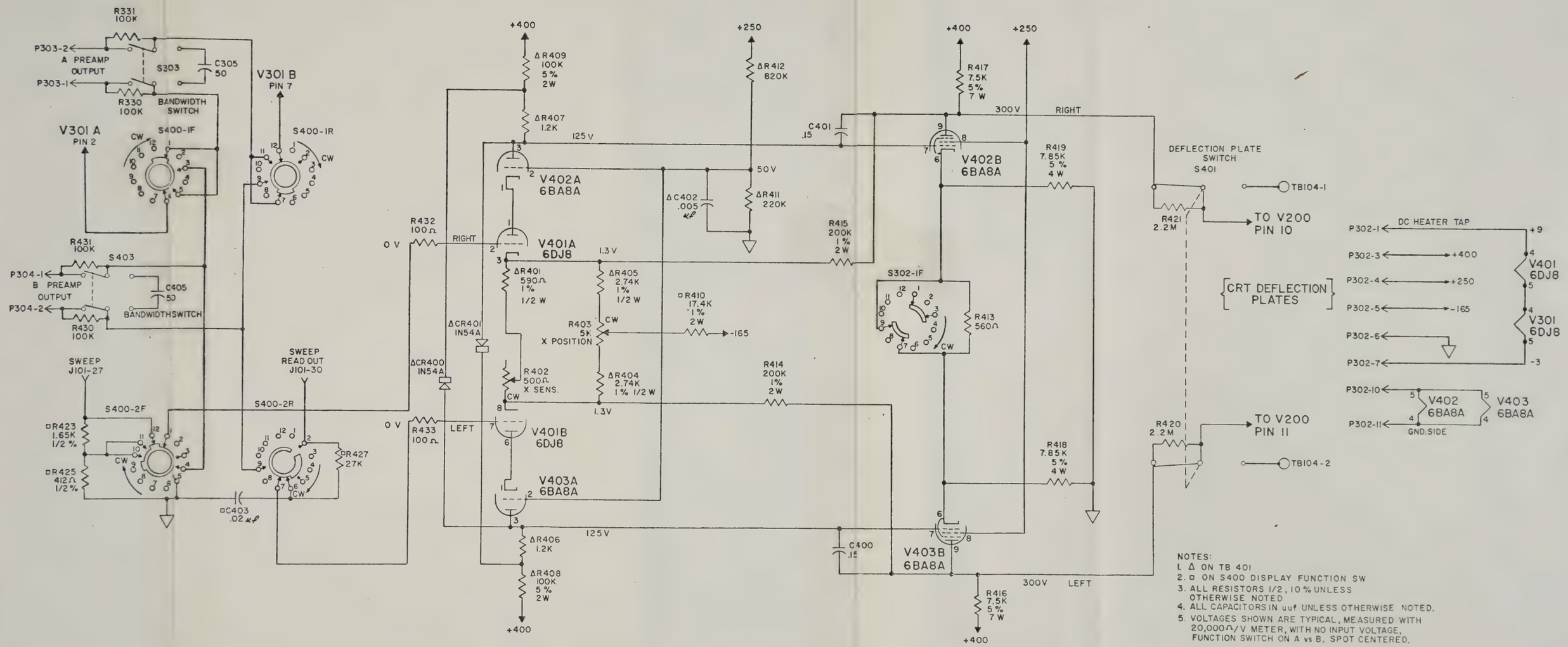

NOTES:
1. Δ ON TB 401
2. □ ON S400 DISPLAY FUNCTION SW
3. ALL RESISTORS 1/2, 10% UNLESS OTHERWISE NOTED
4. ALL CAPACITORS IN μμf UNLESS OTHERWISE NOTED.
5. VOLTAGES SHOWN ARE TYPICAL, MEASURED WITH 20,000Ω/V METER, WITH NO INPUT VOLTAGE, FUNCTION SWITCH ON A vs B, SPOT CENTERED.

CHANGES

1. R412 IS RETURNED TO +400V INSTEAD OF +250V.
2. R412 IS 1.5M.
3. R432 AND R433 ARE LOCATED ON TB401.
4. R408 AND R409 ARE 1W.
5. R434 100Ω ADDED BETWEEN PLATE OF V403B AND R420.

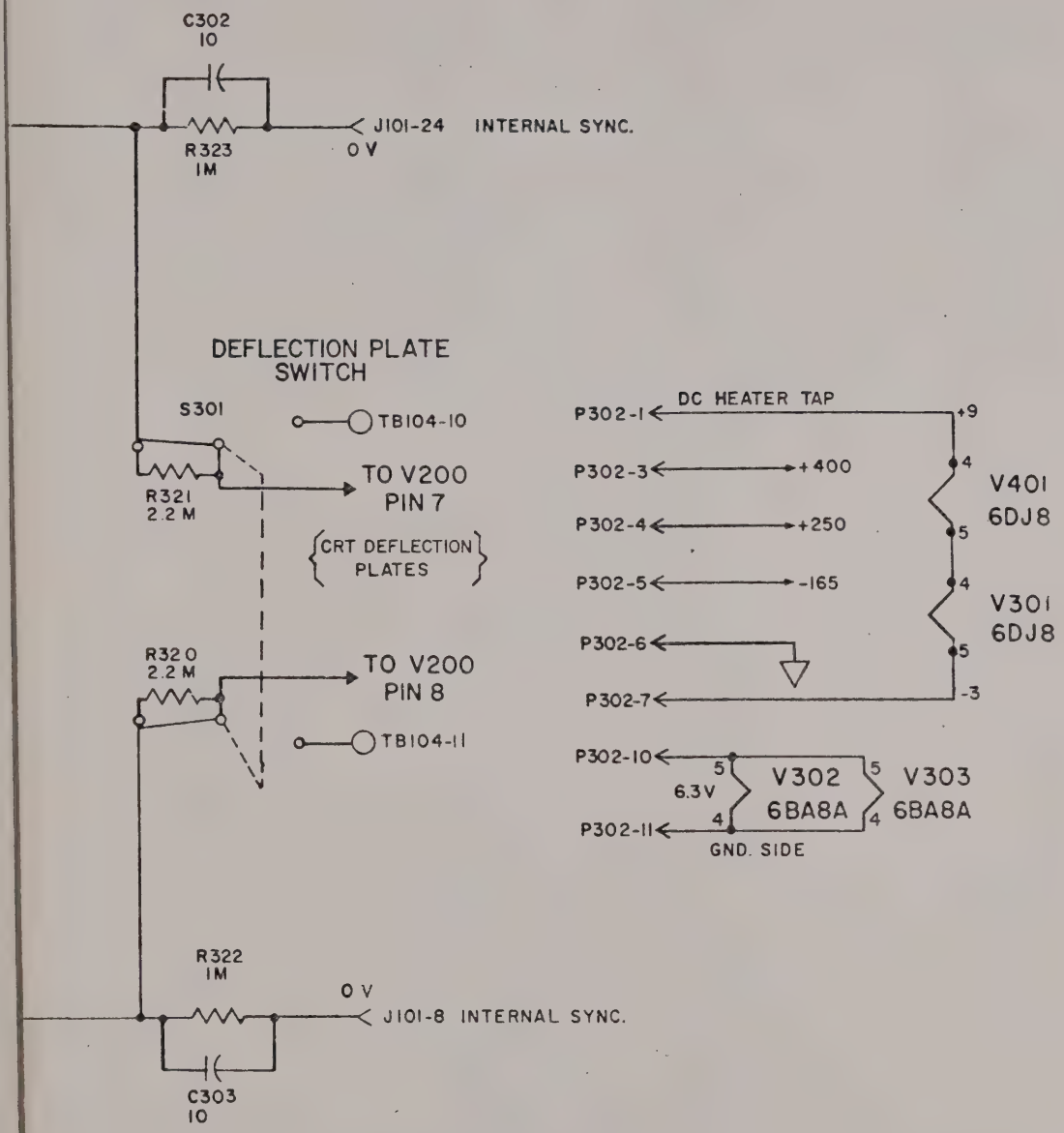
C302
10
R323
1M
J101-24
0 V
INTERNAL SYNC.
DEFLECTION PLATE
SWITCH
S301
TB104-10
R321
2.2 M
TO V200
PIN 7
CRT DEFLECTION
PLATES
R320
2.2 M
TO V200
PIN 8
TB104-11
R322
1M
0 V
J101-8
INTERNAL SYNC.
C303
10
DC HEATER TAP
P302-1
P302-3
+400
P302-4
+250
P302-5
-165
P302-6
P302-7
+9
4
5
4
5
-3
V401
6DJ8
V301
6DJ8
P302-10
P302-11
6.3V
5
4
V302
6BA8A
5
4
V303
6BA8A
GND. SIDE

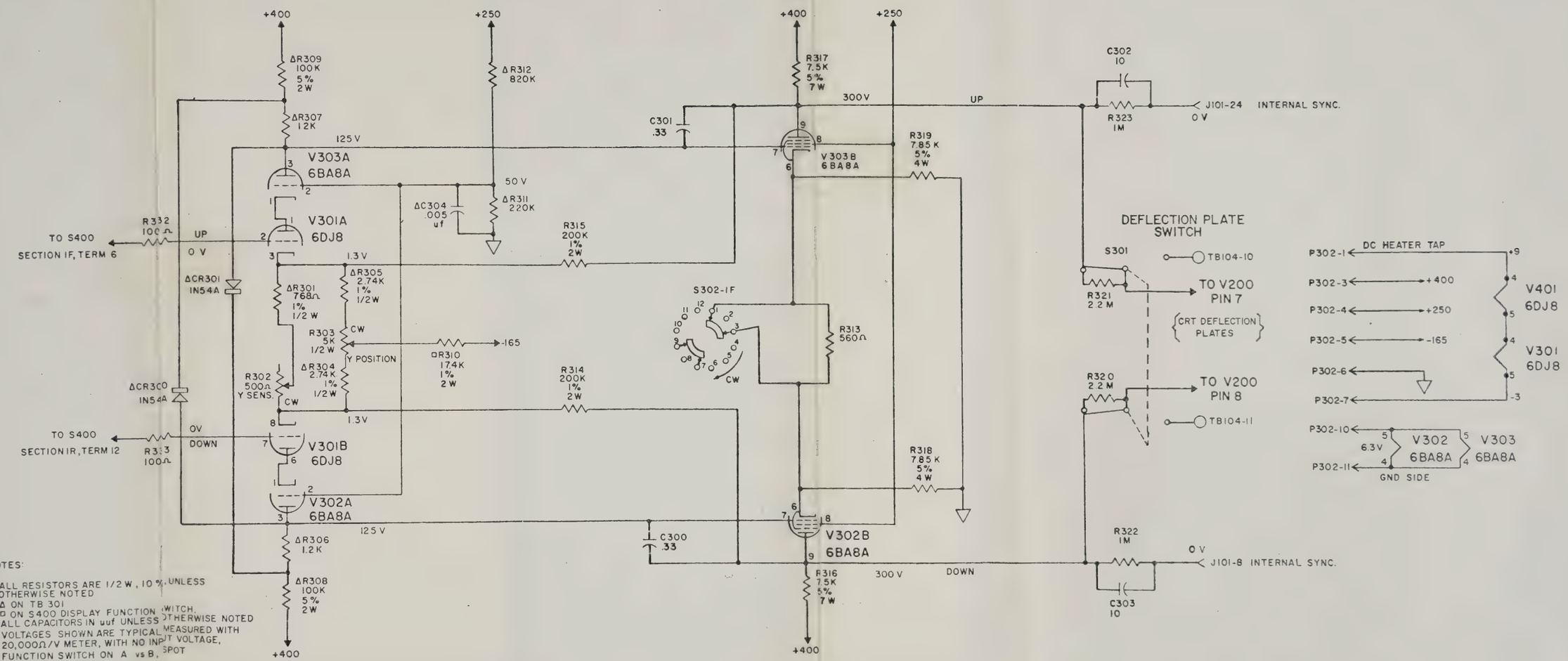

NOTES:

1. ALL RESISTORS ARE 1/2 W, 10 % UNLESS OTHERWISE NOTED
2. Δ ON TB 301
3. □ ON S400 DISPLAY FUNCTION SWITCH.
4. ALL CAPACITORS IN uuf UNLESS OTHERWISE NOTED
5. VOLTAGES SHOWN ARE TYPICAL MEASURED WITH 20,000Ω/V METER, WITH NO INPUT VOLTAGE, FUNCTION SWITCH ON A vs B, SPOT CENTERED.

CHANGES

1. R312 RETURNED TO +400V INSTEAD OF +250V.
2. R312 IS 1.5M.
3. R332 AND R333 ARE LOCATED ON TB301.
4. R303 AND R309 ARE 1W.

ELECTRONIC SWITCH & TRIGGER AMPLIFIER

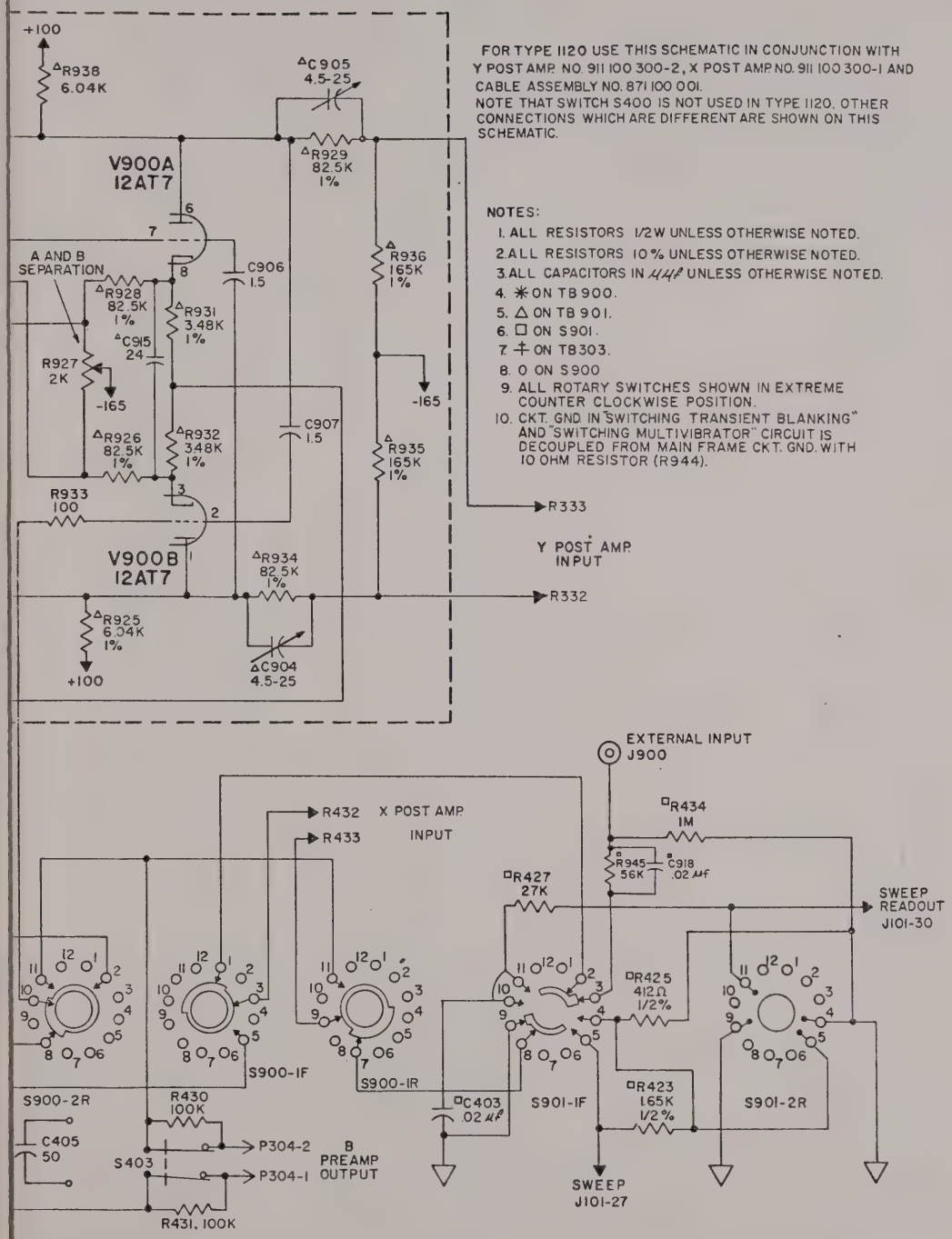

FOR TYPE 1120 USE THIS SCHEMATIC IN CONJUNCTION WITH Y POST AMP. NO. 911 100 300-2, X POST AMP. NO. 911 100 300-1 AND CABLE ASSEMBLY NO. 871 100 001.
NOTE THAT SWITCH S400 IS NOT USED IN TYPE 1120. OTHER CONNECTIONS WHICH ARE DIFFERENT ARE SHOWN ON THIS SCHEMATIC.

NOTES:

1. ALL RESISTORS 1/2W UNLESS OTHERWISE NOTED.
2. ALL RESISTORS 10% UNLESS OTHERWISE NOTED.
3. ALL CAPACITORS IN μμf UNLESS OTHERWISE NOTED.
4. ✳ ON TB 900.
5. △ ON TB 901.
6. □ ON S901.
7. ⊥ ON TB303.
8. O ON S900
9. ALL ROTARY SWITCHES SHOWN IN EXTREME COUNTER CLOCKWISE POSITION.
10. CKT. GND. IN "SWITCHING TRANSIENT BLANKING" AND "SWITCHING MULTIVIBRATOR" CIRCUIT IS DECOUPLED FROM MAIN FRAME CKT. GND. WITH 10 OHM RESISTOR (R944).

Drawing No. 911 120 500

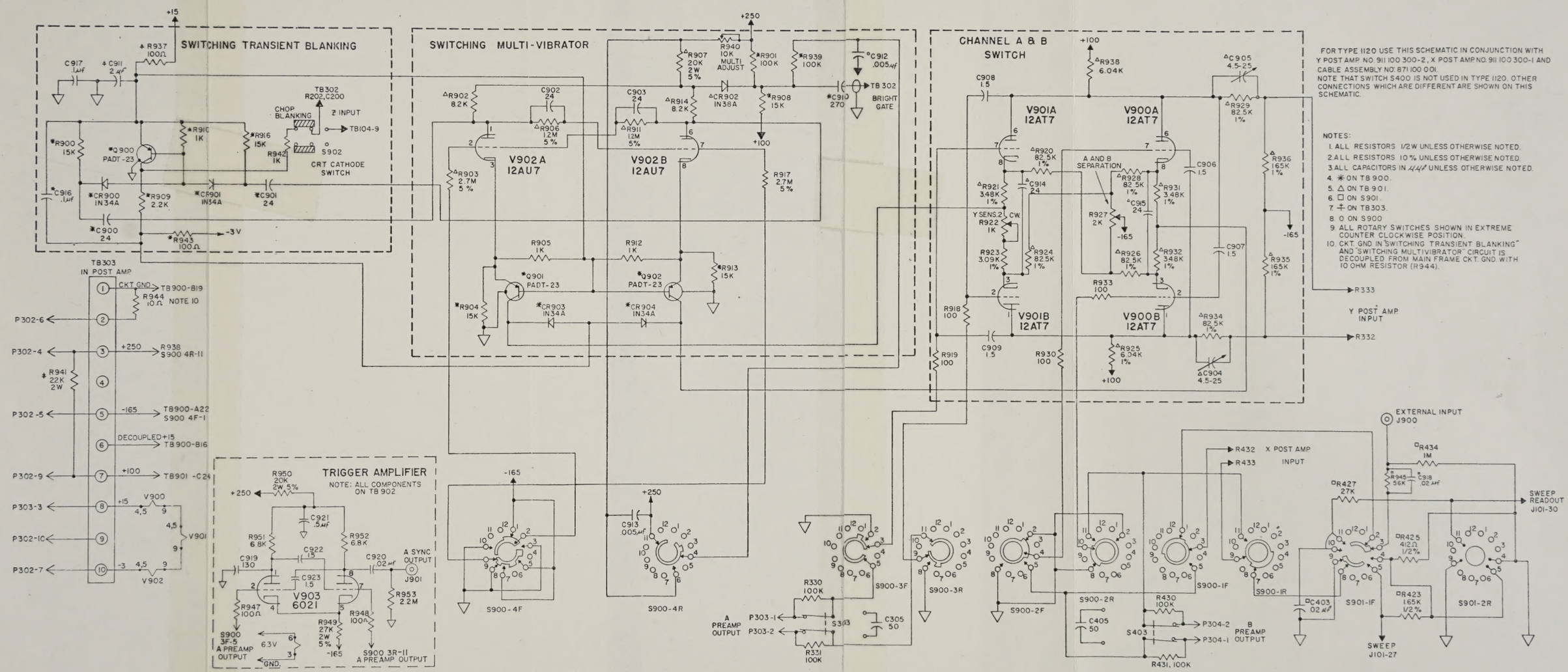

CHANGES

1. C917 IS LOCATED ON TB900.
2. R939 IS 47K.
3. HEATER OF V903, 6021 IS ACROSS HEATER WINDING, BUT EITHER SIDE MAY BE GROUNDED.

ELECTRONIC SWITCH & TRIGGER AMPLIFIER

Drawing No. 911 120 500

SECTION V

WARRANTY AND REPAIRS

5-1. CLAIM FOR DAMAGE IN SHIPMENT

If the instrument is damaged in any way or fails to operate upon arrival, a claim should be filed with the carrier. A full report of the damage should be obtained from the claim agent and a copy forwarded to Analab. We will assist as much as possible in helping you settle the claim and arrange for repair or replacement. Please include type and serial numbers when referring to this equipment for any reason.

5-2. WARRANTY

Analab Instrument Corporation warrants for a period of one year after delivery to the original purchaser that each instrument it manufactures is free from defects in material or workmanship. (Power transformers manufactured by or for Analab carry a five year warranty.) Repairs or service under warranty will be made when the instrument has been returned to Analab or one of its authorized service depots, transportation charges prepaid, by the original purchaser, and when, upon our examination, it is determined to our satisfaction to be defective. Liability under this warranty is limited to service or adjustment of any instrument returned to the factory or authorized service depot and to replacement of any defective parts. If the defect has been caused by misuse or abnormal conditions of operation, repairs will be billed at normal service rates, but an estimate will be submitted for approval before work is started.

5-3. RETURNING INSTRUMENTS FOR REPAIR, IN OR OUT OF WARRANTY

If any malfunction develops, please take the following steps:

A.—Send full details of the fault and include type and serial numbers. Upon receipt of this information we will send you service instructions or shipping instructions to return the instrument to Analab or one of its authorized service depots.

B.—If the instrument is to be shipped to us or a service depot, forward it transportation prepaid. If requested, an estimate of the charges will be made before the work begins in those cases where the instrument is not covered by warranty.

5-4. PACKING

Whenever possible, return the instrument in its original carton and packing. If such is no longer available, pack the instrument in a strong exterior container. The instrument should be surrounded with excelsior or similar shock-absorbing material.

ANALAB INSTRUMENT DIVISION

BENRUS WATCH COMPANY, INC.

30 Canfield Road

Cedar Grove, Essex County, N. J., U.S.A.

AREA CODE 201 — CE 9-6500

Cable Address: ANALAB